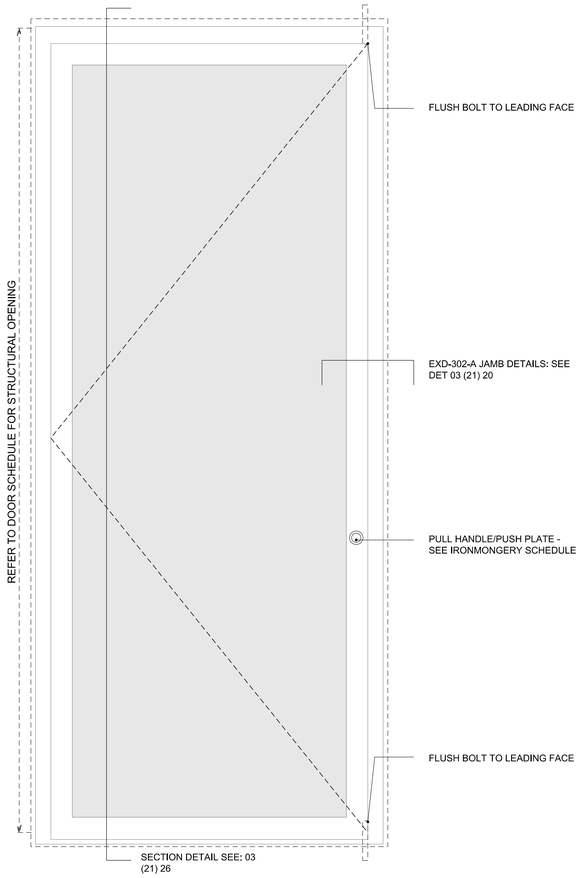

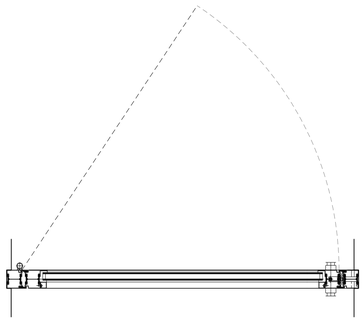

SPEC	EXD-302
MIN FIRE RATING	-
MIN ACOUSTIC RATING	32 dB
FRAME MATERIAL/FINISH	PPC STEEL FRAME

EXD-302-A: OFFICE DOOR

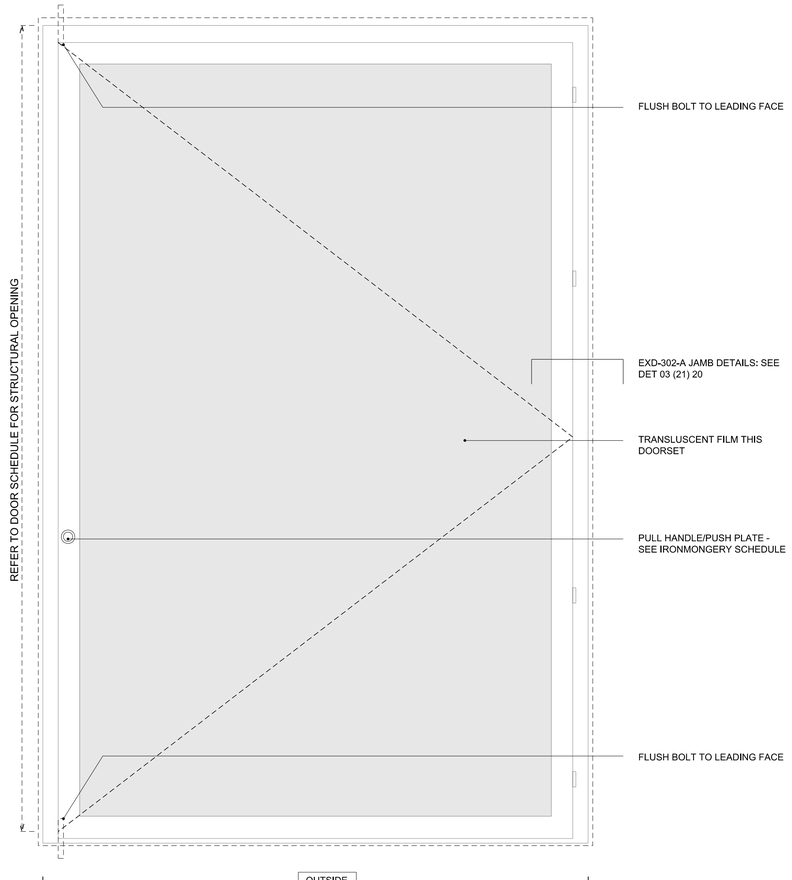

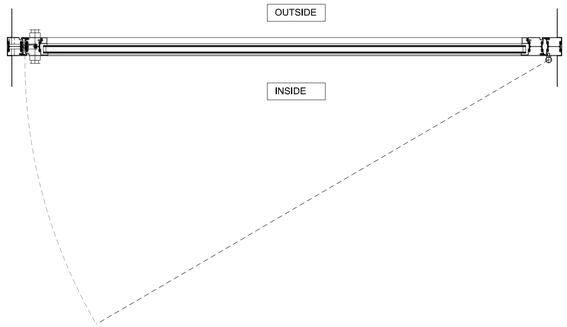

SPEC	EXD-302
MIN FIRE RATING	30mins
MIN ACOUSTIC RATING	30 dB
FRAME MATERIAL/FINISH	PPC STEEL FRAME

EXD-302-B: READING ROOM DOOR

DO NOT SCALE FOR CONSTRUCTION

THE CONTRACTOR IS TO CHECK AND VERIFY ALL BUILDING AND SITE DIMENSIONS, LEVELS AND SEWER INVERT LEVELS AT CONNECTION POINTS BEFORE WORK STARTS.

THIS DRAWING IS TO BE READ AND CHECKED IN CONJUNCTION WITH ENGINEERS AND OTHER SPECIALIST DRAWINGS.

THE DRAWING AND THE WORKS DEPICTED ARE THE COPYRIGHT OF HAWORTH TOMPKINS LTD AND MAY NOT BE REPRODUCED EXCEPT BY WRITTEN PERMISSION.

NOTES

0 0.25 0.5m

REV	DATE	DESCRIPTION
C1	09.07.2022	STAGE 5 - CONSTRUCTION

HaworthTompkins
33 Greenwood Place, London NW5 1LB
+44 (0)20 7250 3225, www.haworthtompkins.com

JOB 1811: WARBURG INSTITUTE

DRG External Door Types Sheet 3

DRG No 1811-HT-31-102

REV C1

SCALE 1:10@A1

DATE 08.21

DRAWN BY LH

INSPECTED BY NH

DRAWING STATUS CONSTRUCTION