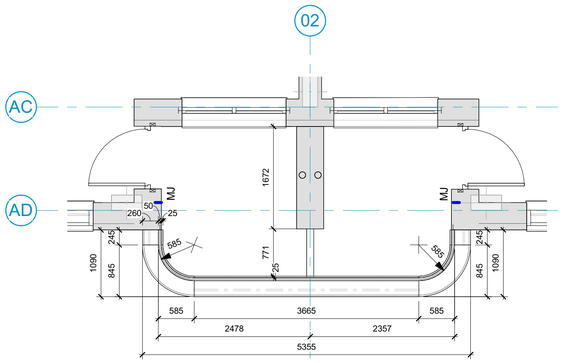

1 Block A&C Balcony Plan - Type 1A
1 : 50

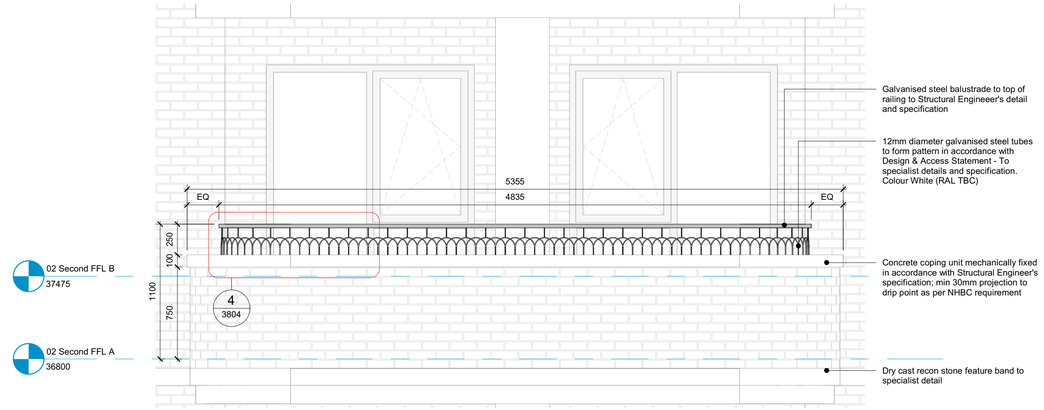

3 Block A& C Type 1A Balustrade - Typical Elevation
1 : 25

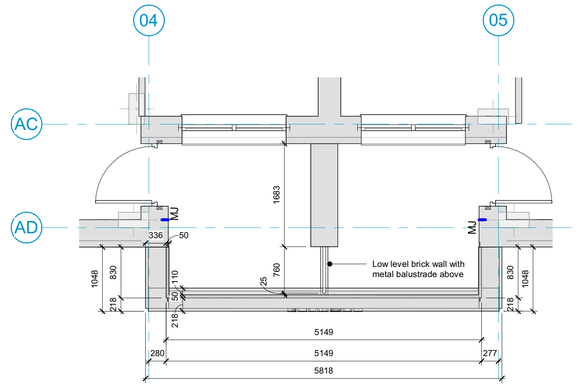

2 Block A&C Balcony Plan - Type 1B
1 : 50

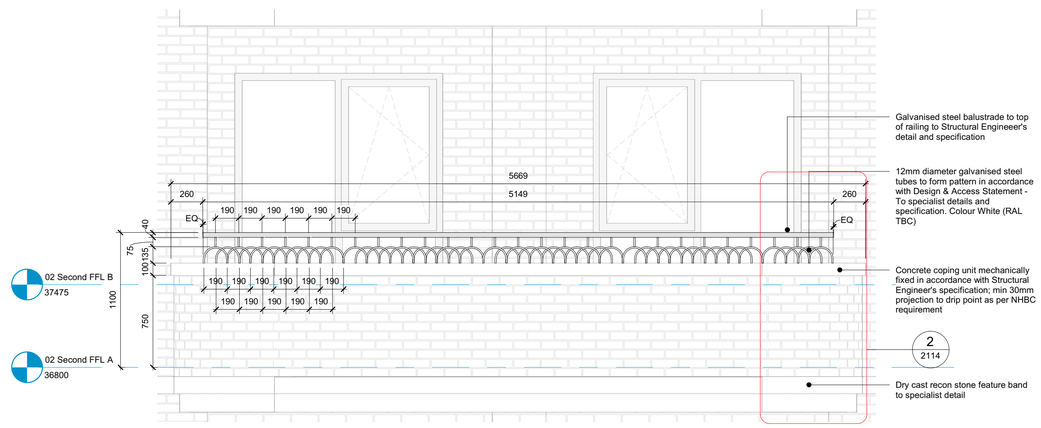

4 Block A&C Type 1B Balustrade - Typical Elevation 1
1 : 25

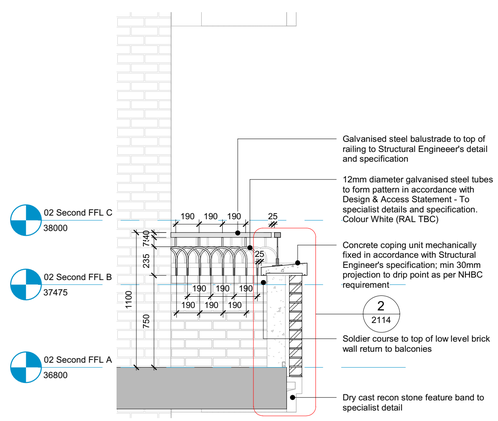

5 Block A&C Type 1B Balustrade - Typical Elevation 2
1 : 25

CDM 2015 Health & Safety Information

This information relates only to 'Significant Hazards' identified on this drawing and is to be read in conjunction with the Designer's Risk Assessment Register.

© ECE Architecture Limited. No dimensions to be scaled from drawing except for the purposes of Planning Applications. The contractor should check all dimensions on site. It is the contractors responsibility to ensure compliance with Building Regulations.

Vistry Partnerships

Job Title
Belmont Street, Camden

Drawing Tittle
External Metalwork - Typical Balcony Balustrade Setting Out (Sheet 1)

Scale
SCALE VARIES

Drawn	Checked	Date
RS	PA	29/03/22

Project	Originator	Zone	Level	Type	Displ.	Drg. No.	Rev
LD504	ECE	ZZ	ZZ	DR	A	3804	P01

Status
PRELIMINARY

Rev	Date	Revision Details	Dr	Ch
P01	29.03.22	Preliminary Issue	AL	PA

London: 76 Great Suffolk Street, London, SE1 0BL
T 020 7928 2773 E london@ecearchitecture.com
Sussex: Brooklyn Chambers, 11 Goring Road, Worthing, West Sussex, BN12 4AP
T 01903 248777 E sussex@ecearchitecture.com
Bristol: Westworks, Beacon Tower, Colston Street, Bristol, BS1 4XE
T: 0117 214 1101 E bristol@ecewestworks.com
ECE Architecture
www.ecearchitecture.com

CAD Plot Date:29/03/2022 17:10:36