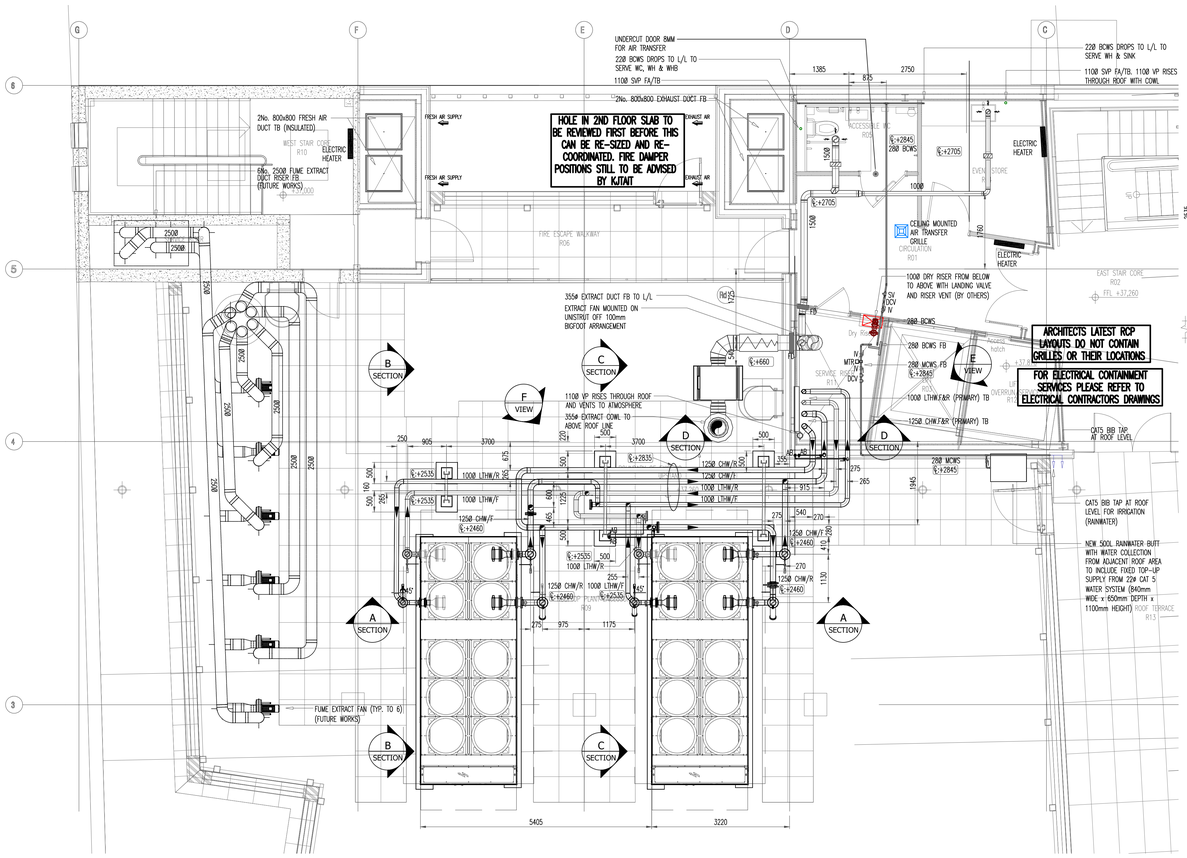

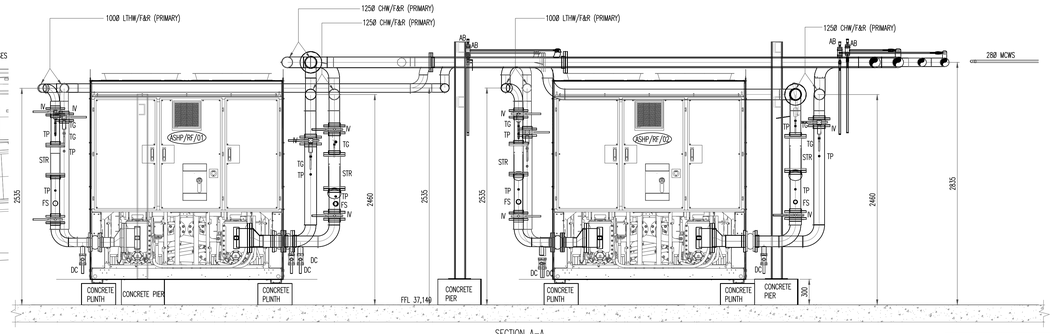

SECTION A–A
SCALE 1:25

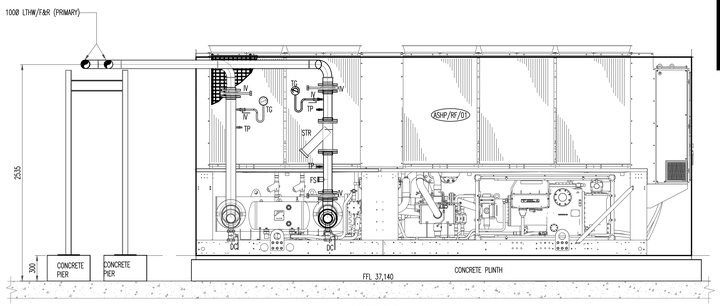

SECTION B–B
SCALE 1:25

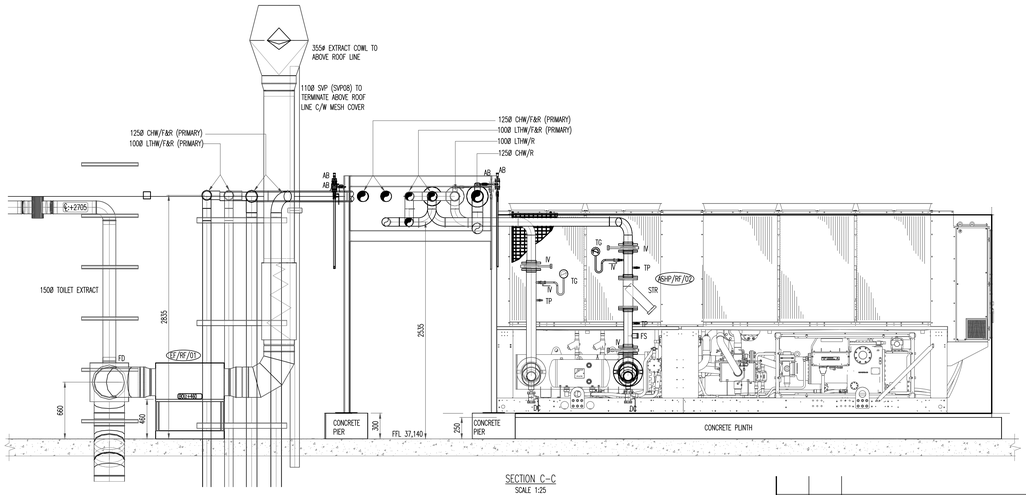

SECTION C–C
SCALE 1:25

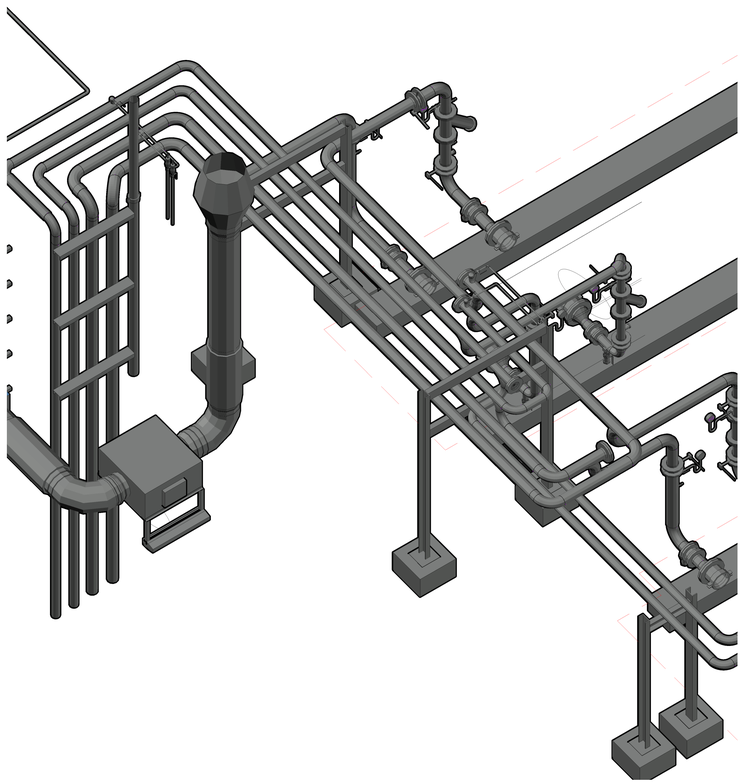

VIEW F
SCALE N.T.S.

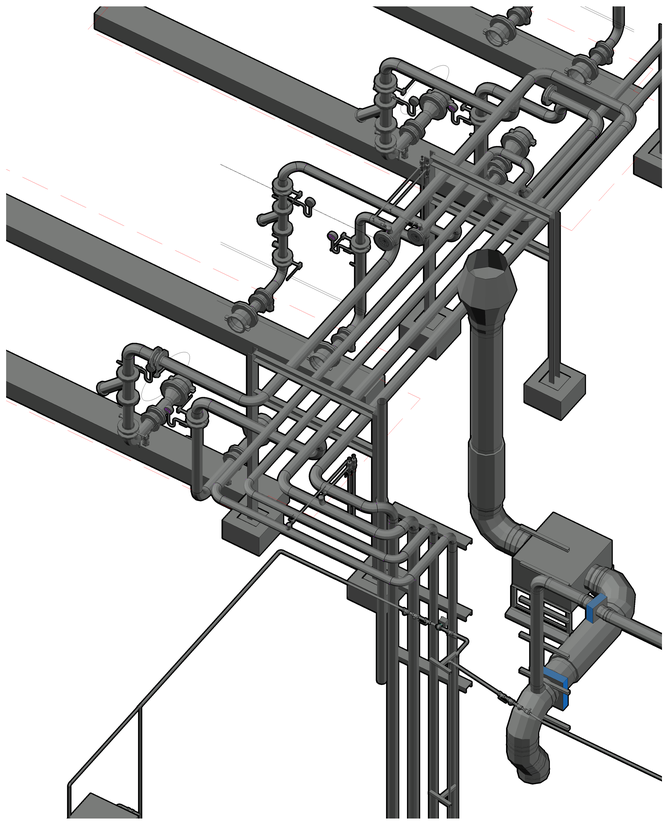

VIEW E
SCALE N.T.S.

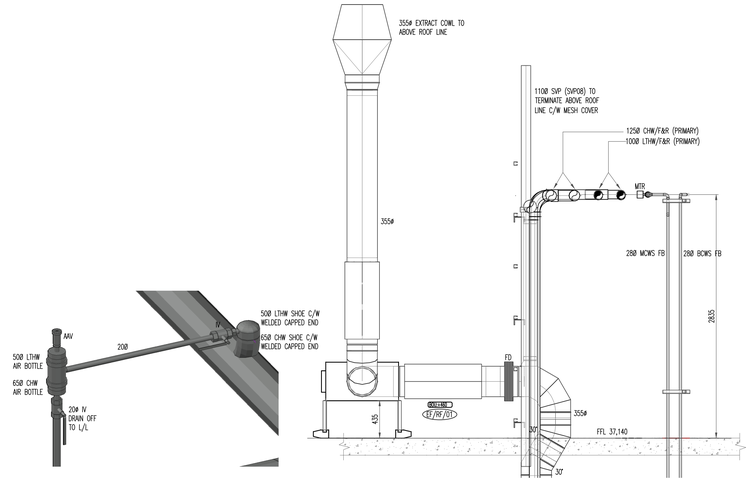

SECTION D–D
SCALE 1:25

TYPICAL AIR BOTTLE DETAIL
SCALE N.T.S.

KEY PLAN

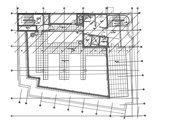

DRAWINGS REFERENCES

ARCHITECT (BOSWELL MITCHELL & JOHNSTON)
PA01-BMJ-ZZ-05-DR-A-1007-C01

NOTES:–

1. INSULATION NOT SHOWN FOR CLARITY BUT HAS BEEN CO-ORDINATED. REFER TO LATEST CO-ORDINATED 3D MODEL. FOR FULL DETAILS OF INSULATION OF SERVICES PLEASE REFER TO SPECIFICATION.
2. THIS DRAWING IS TO BE READ IN CONJUNCTION WITH ALL MECHANICAL, PUBLIC HEALTH AND ELECTRICAL DRAWINGS FOR THIS CONTRACT.
3. ALL MECHANICAL PIPEWORK HIGH LEVEL POINTS TO BE VENTED AND ALL LOW PIPEWORK POINTS HAVE DRAIN COCKS.
4. DRAINAGE AND FOUL VENT TO BE FINALISED AT A LATER STAGE WHEN LOWER FLOORS HAVE BEEN CO-ORDINATED
5. DIMENSIONS WILL BE ADDED AFTER DRAWING IS APPROVED

NOTE:–
LEVELS ARE TAKEN FROM DATUM LEVEL FFL 37,140

LEGEND

IL=350	INVERT LEVEL SHOWN FOR MECHANICAL PIPEWORK SERVICES FROM CENTRE OF PIPE TO SOFFIT OF SLAB
IL=350	INVERT LEVEL SHOWN FOR PUBLIC HEALTH WATER SERVICES PIPEWORK FROM CENTRE OF PIPE TO SOFFIT OF SLAB
IL=3320	INVERT LEVEL SHOWN FOR PUBLIC DRAINAGE SERVICES PIPEWORK FROM UNDERSIDE OF PIPE TO SOFFIT OF SLAB
B00:=3500 IL=350	INVERT LEVEL SHOWN FOR MECHANICAL DUCTWORK SERVICES FROM BOTTOM OF DUCT OR CENTRE OF PIPE TO SOFFIT OF SLAB

REV	DATE	DESCRIPTION	BY
A4	09/12/22	DRAWING RE-ISSUED FOR APPROVAL	MM
A3	05/12/22	DRAWING RE-ISSUED FOR APPROVAL	MM
A2	01/12/22	ASHP RELOCATED. DRAWING RE-ISSUED FOR APPROVAL	MM
A1	02/09/22	ISSUED FOR APPROVAL	MM
I	20/05/22	ISSUED FOR INFORMATION	MM

ICS DESIGNED | DELIVERED
1st Floor
The Cowshed
off Packwood Lane
Lapworth
Warwickshire
B94 6AU
Tel: (01527) 578 530
email: cad@indoorclimate.co.uk

CLIENT
CLEARBELL CAPITAL

PROJECT
GRAYS INN ANATOMY
85 GRAYS INN ROAD

TITLE
FIFTH FLOOR LEVEL
CO-ORDINATED SERVICES
LAYOUT

DATE	DRAWN BY	CHECKED
19-05-22	MM	PC

SCALE	PAPER	
1:50	A0	ICS6199-5200-05-DR-M-001

STATUS	REVISION
FOR APPROVAL	A4