A1

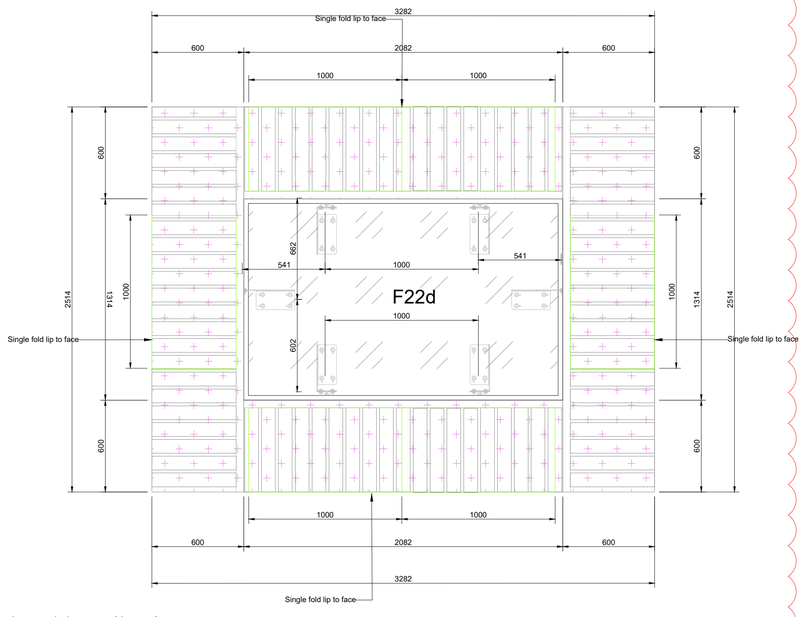

F22d Bespoke metal planters with seat/storage
Scale: 1:20

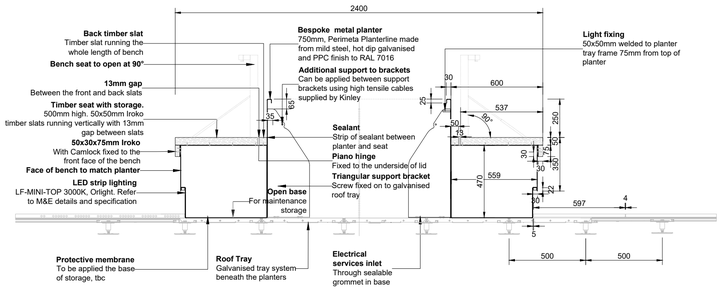

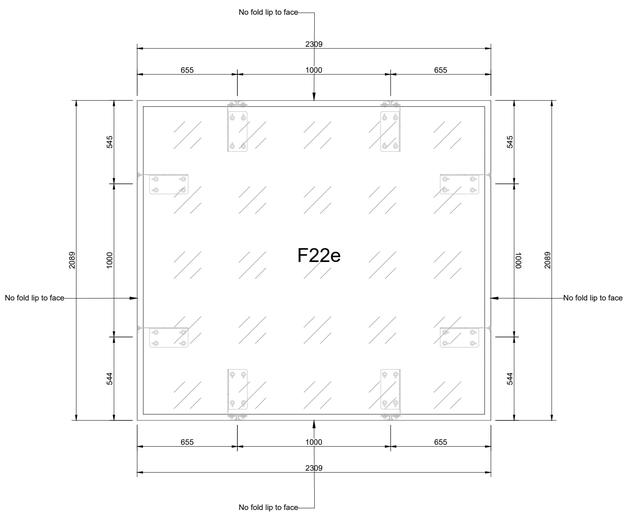

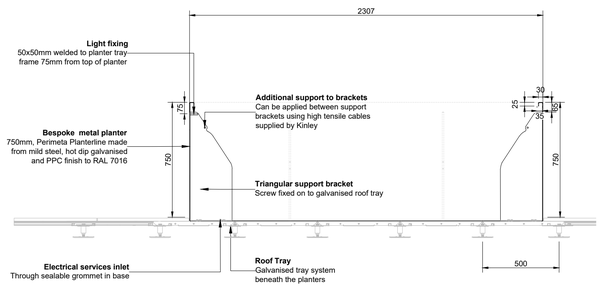

F22e Bespoke metal planter
Scale: 1:20

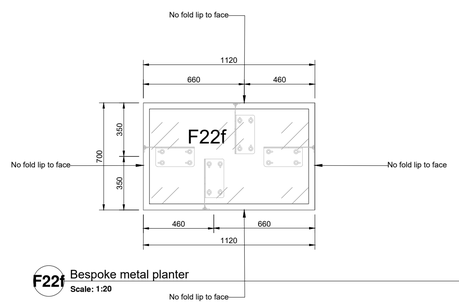

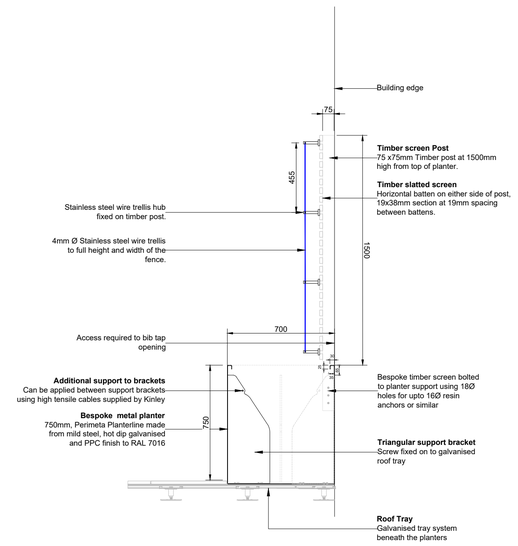

F22f Bespoke metal planter
Scale: 1:20

KEY

DENOTES SECTION OF BENCHES WITH STORAGE

DENOTES STORAGE ACCESS POINTS

DO NOT SCALE FROM DRAWING

Drawing Information

Copyright of Place Design + Planning Ltd. 2008
All Rights Reserved

PLEASE NOTE: Figured dimensions take precedent over scale, do not scale from drawings.

Inform Place Design + Planning Ltd of any discrepancies before works commence on site.

All dimensions to be checked on site

SIGNIFICANT HEALTH, SAFETY & ENVIRONMENTAL INFORMATION RELATING TO CDM

HEALTH:

SAFETY:

ENVIRONMENTAL:

IT IS ASSUMED ALL WORKS WILL BE CARRIED OUT BY A COMPETANT CONTRACTOR WORKING, WHERE APPROPRIATE , TO AN AGREED METHOD STATEMENT

Rev.	Desciption	date	by	checked
C00	First Issue	04/03/22	BF	GH
C01	Minor Amendments to planters F22d and f	08/03/22	BF	GH
C02	Changes as per Willerby's comments	30/06/22	BF	GH

Notes:
- Refer to drawings CW-PLA-ZZ-ZZ-RF-DR-LS-00006 for Roof Terrace Planters and Benches Location Plan.
- All planters to contain drainage board in base to assist with drainage as per CW-WLL-ZZ-ZZ-TS-X-0015.

Client
SKANSKA

Project Title
Castlewood House

Drawing Title
Planters schedule - Roof terraces (2 of 7)

Project Stage
Construction

PLACE Design + Planning

Place Design + Planning Ltd
16 West Barnes Lane
London, SW20 0BJ, UK
+44 208944 1940
+44 2089441117

scale 1:20 | at A1 | date 01/02/22 | drw by BF | ch by GH

drw no. CW-PLA-ZZ-RF-DR-LS-00417 | rev no. C02