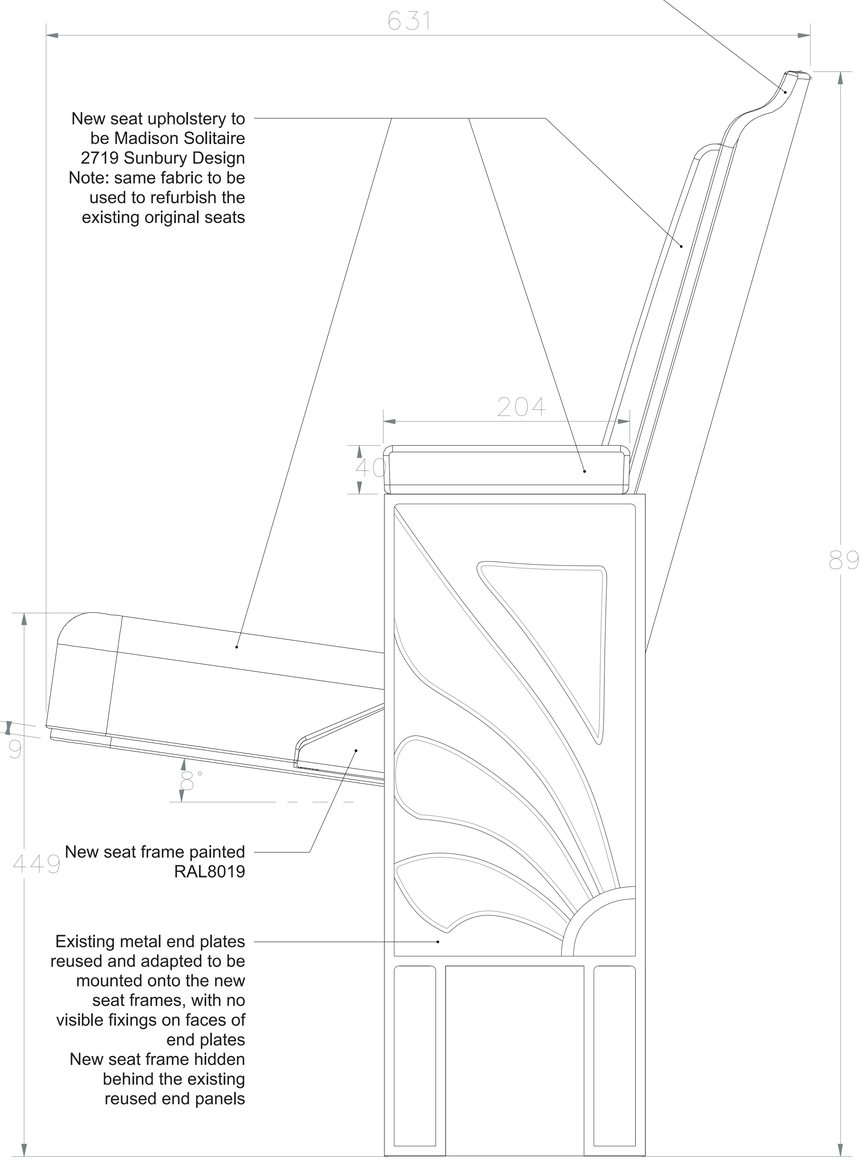

1
600

New seat side elevation with existing sides reused

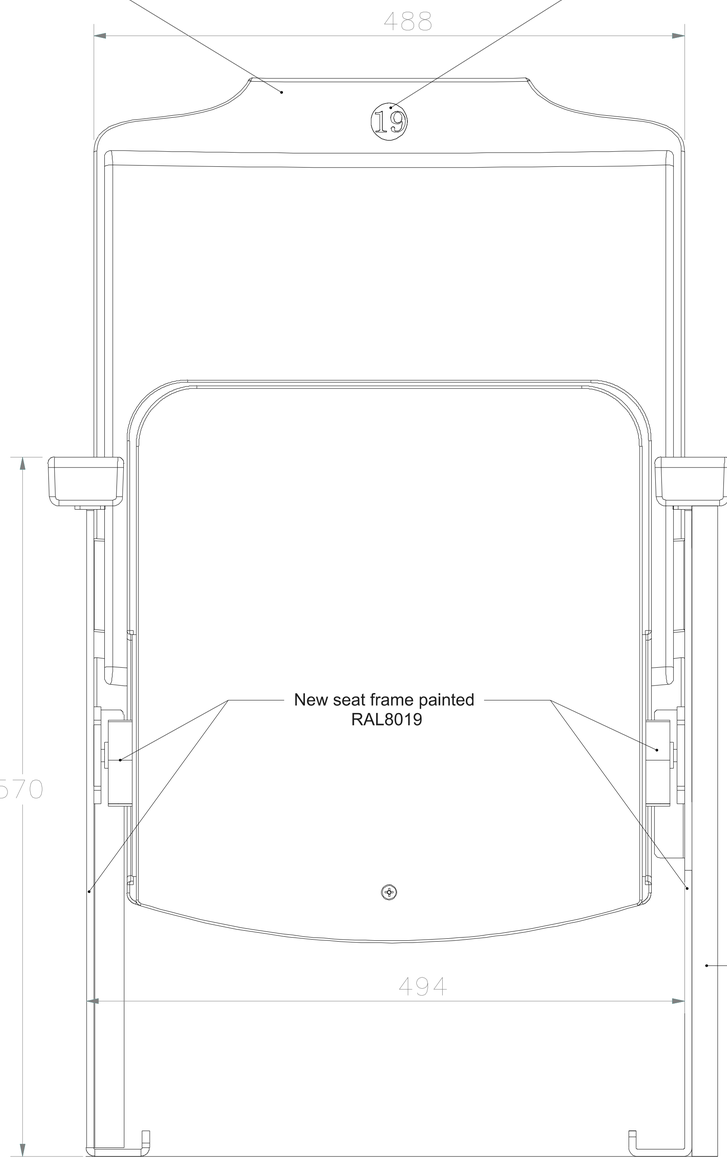

2
600

New seat front elevation with existing sides reused

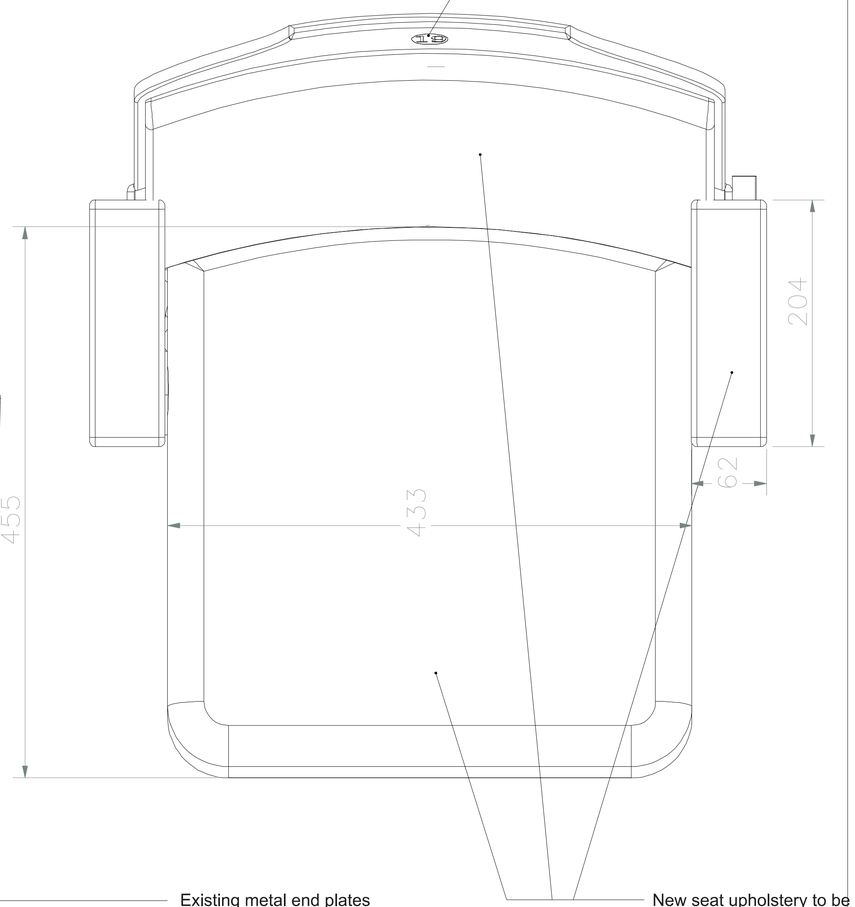

3
600

New seat plan

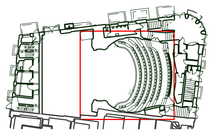

THE CONTRACTOR IS TO CHECK AND VERIFY ALL BUILDING AND SITE DIMENSIONS, LEVELS AND SEWER INVERT LEVELS AT CONNECTION POINTS BEFORE WORK STARTS

THIS DRAWING IS TO BE READ AND CHECKED IN CONJUNCTION WITH ENGINEERS AND OTHER SPECIALIST DRAWINGS

THE DRAWING AND THE WORKS DEPICTED ARE THE COPYRIGHT OF THIS PRACTICE AND MAY NOT BE REPRODUCED EXCEPT BY WRITTEN PERMISSION

0 0.125m 0.25

Rev:	Date:	Description
A	11/10/22	Stage 3 - Planning

Job: 2201 Ambassadors Theatre
Client: Ambassador Theatre Group

Drawing: New Seats Design
Drawing no: 2201-3-600
Rev: A
Status: Stage 3
Scale: 1:5@A3, 1:2.5@A1
Date: 11/10/22

citizensdesignbureau
Ground Floor Units 01 & 03, 6 Westgate Street, London, E8 3RN
t : 02030959732
e : everyone@citizensdesignbureau.net