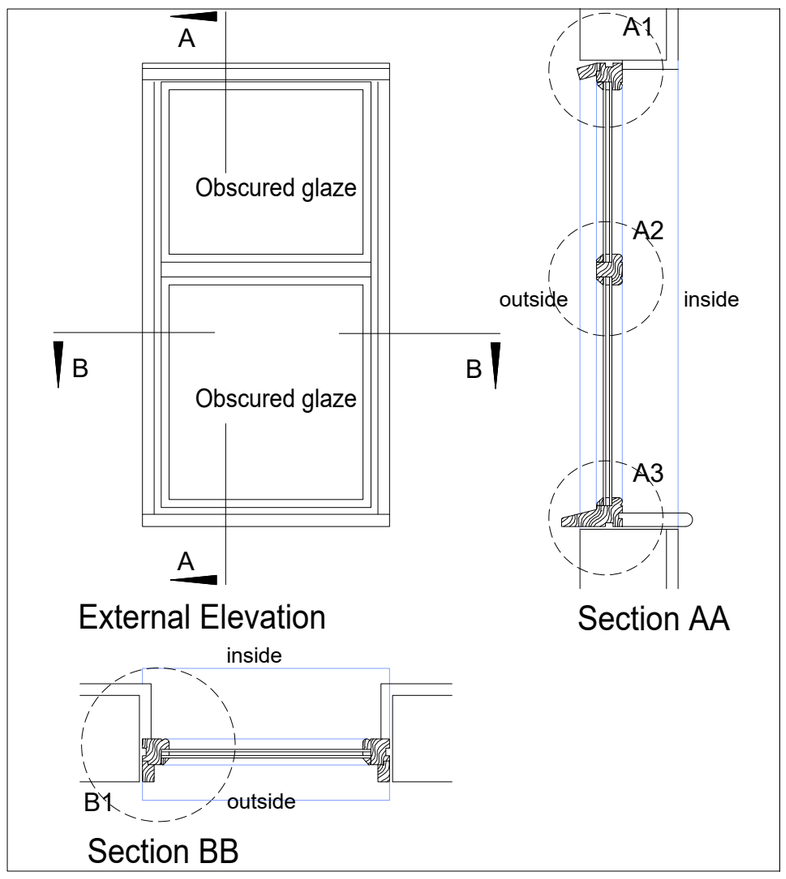

KEY DRAWING - scale 1:10

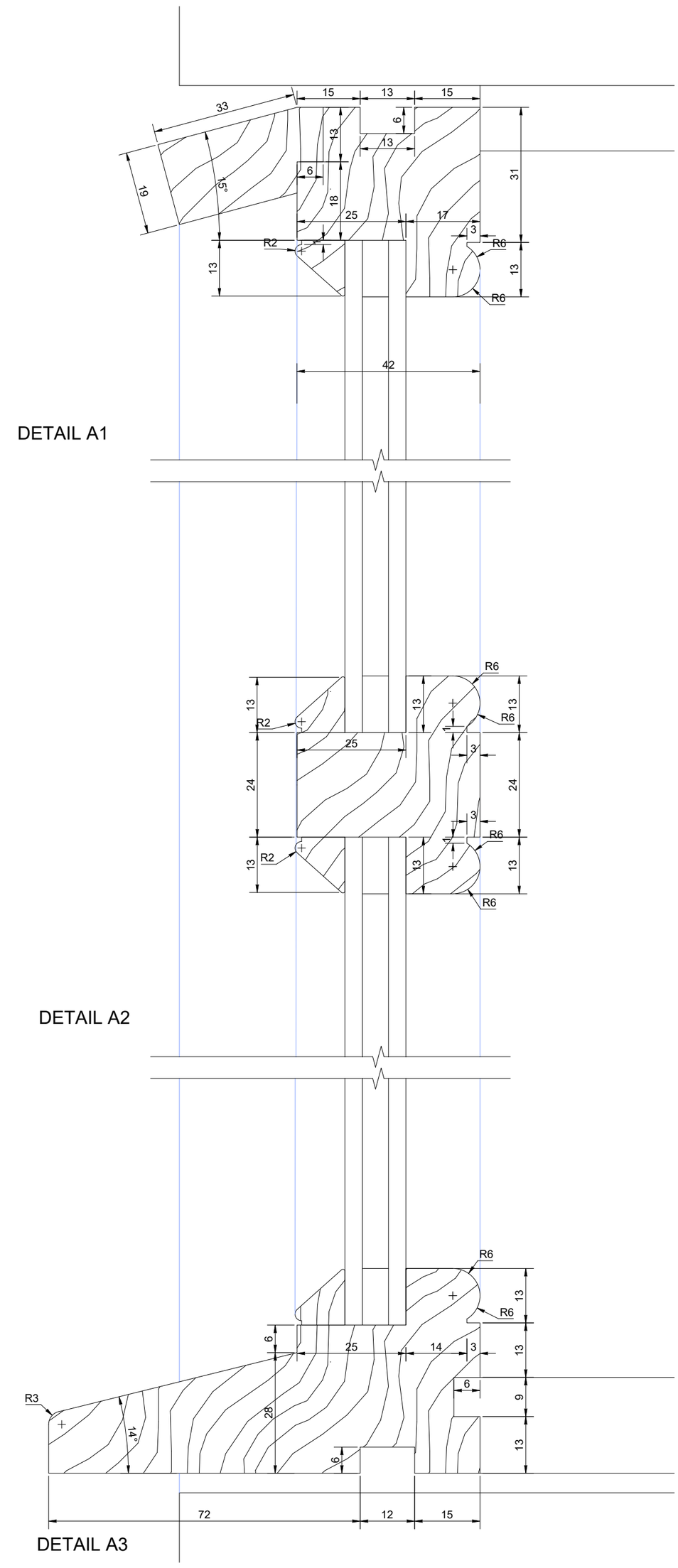

VERTICAL SECTION DETAILS (full size)

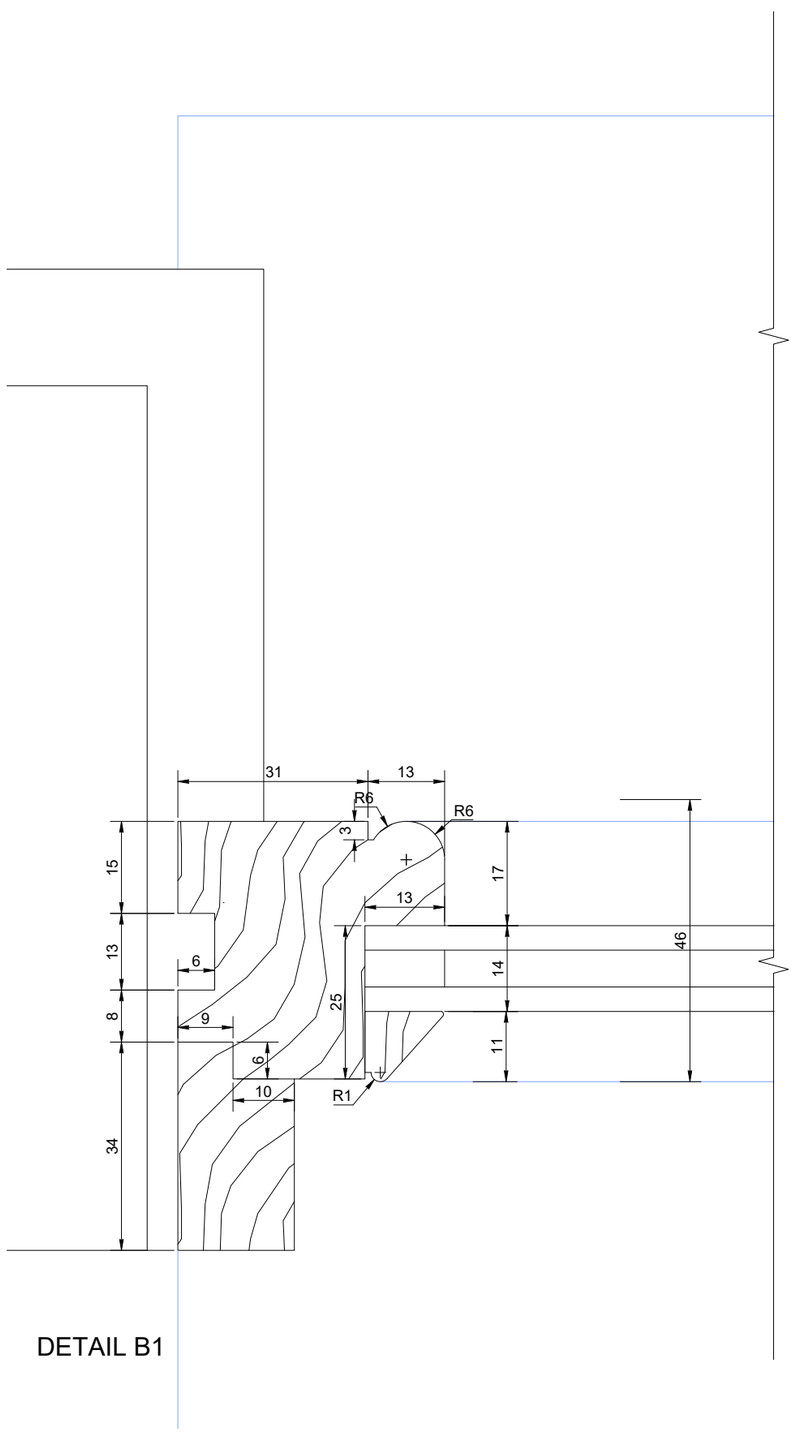

HORIZONTAL SECTION DETAILS (full size)

NOTES:

1. Glass to match the existing in weight and thickness.
2. Unless otherwise stated, joinery is to be in hardwood from a sustainable source.
3. All opening casements to be weatherstopped.
4. All dimensions to be checked on site prior to fabrication.
5. Cills to have min 30mm overhang unless agreed otherwise.

This drawing is the copyright of Patrick Howard Design Associates and may not be reproduced in whole or part without written permission
Contractors must verify all dimensions on site before setting out, commencing work or making any shop drawings & must not scale copies without verifications
Copyright (C)

REV	BRIEF DETAILS	DATE

P.H.D. ASSOCIATES
BRAEMAR HOUSE
WATER LANE
STANSTED, ESSEX
CM24 8BJ
TEL: 01279 817342
EMAIL: INFO@PHDASSOCIATES.CO.UK

Project: Oxford House Hostel, Tavistock Place, London WC1H 9RE

Drawing: New fixed window W-1/11 & 12 Joinery Details

Date: 18/08/2022

Drawn By: VM/ADC/SHD

Scale: 1:1@A2

Drawing Number: 2105/BC/J/105 (-)