A2

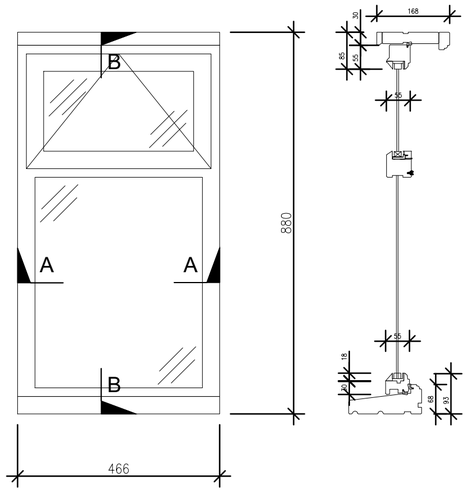

Elevation

Detail B

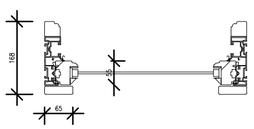

Detail A

EXISTING TYPICAL TIMBER SINGLE GLAZED TOP HUNG CASEMENT WINDOW DETAIL
Shown W04 (W14 & W16)
Scale @ 1:10

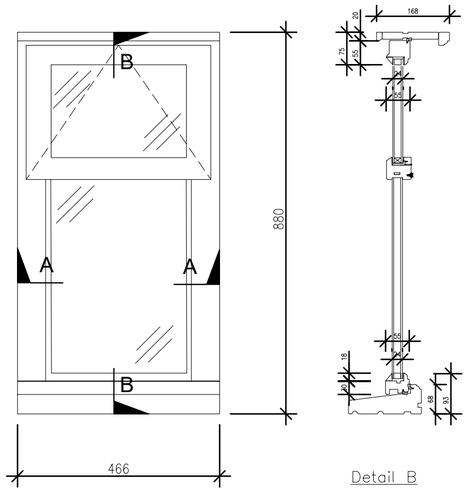

Elevation

Detail B

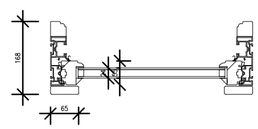

Detail A

PROPOSED TYPICAL TIMBER DOUBLE GLAZED TOP HUNG CASEMENT WINDOW DETAIL
Shown W04 (W14 & W16)

mm 0 100 200 300 400 500 600 700 800 900 1000
SCALE
1:10

ALL DIMENSIONS, LEVELS AND CLEARANCES TO BE CHECKED ON SITE PRIOR TO WORKS COMMENCING

THIS DRAWING SHOULD BE READ IN CONJUNCTION WITH ALL OTHER PROJECT RELATED DRAWINGS, SPECIFICATIONS AND DOCUMENTS AS PART OF A SINGLE PROJECT PACKAGE.

ANY DISCREPANCY BETWEEN THIS DRAWING, OTHER DRAWINGS FORMING PART OF THIS CONTRACT, OR THE SPECIFICATION / BILLS OF QUANTITIES MUST BE CLARIFIED BEFORE COMMENCEMENT OF ANY WORK OR ORDERING OF ANY MATERIALS.

PLEASE CONSULT THE AUTHOR OR PROJECT MANAGER SHOULD THE READER REQUIRE CLARIFICATION ON ANY PART OF THIS DRAWING.

THE COPYRIGHT OF THE DRAWING AND DESIGN IS THE PROPERTY OF THE COMPANY. THIS INFORMATION HAS BEEN ISSUED UNDER SPECIFIC TERMS FOR THIS PROJECT AND MAY ONLY BE USED AND REPRODUCED ACCORDINGLY.

NOTES

Rev	Date	By	Chk	Apr	Comment
P01	18.04.22	SEJ	BG	JM	Planning Issue

BRINGING IDEAS TO LIFE

FRANKHAM

Frankham Consultancy Group Limited
E: enquire@frankham.com
www.frankham.com

SIDCUP OFFICE
Irene House
Five Arches Business Park
Maidstone Road
Sidcup, Kent DA14 5AE
T: 020 8309 7777

OXFORD OFFICE
Citibase Oxford
New Barclay House
234 Botley Road
Oxford OX2 0HP
T:01865 322500

LONDON OFFICE
First Floor
Bridge House
181 Queen Victoria Street
London EC4V 4EG
T: 020 7651 0790

STEVENAGE OFFICE
Suite 237, Second Floor
Kings Court Business Centre
London Road, Stevenage
Hertfordshire SG1 2NG
T:020 3714 7063

Client:
AD Group

Project Title:
4 Shoot-up Hill,
Camden, NW2 3QN
Windows and Side Door
Replacement Works

Drawing Title:
Existing and Proposed Window Details 3

Status:
PLANNING ISSUE

Drawn By:	Designed By:	Checked By:	Approved By:
SEJ	SEJ	BG	JM

Original Issue Date:	Scale @ A2:
18/04/2022	1:10

Job No/ File Ref	Originator	Zone	Level
228021	FCG	MB	EL

Type	Discipline	Number	Suitability	Revision
DR	B	2402	S4	P01