## EXISTING FLOOR DETAILS

SCALE 1:5

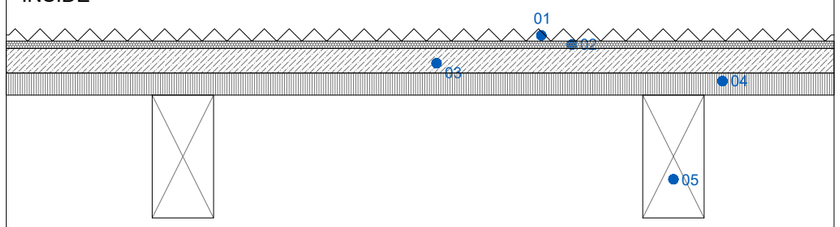


# EFL-01

1:5

EXISTING CARPET FLOOR
ON BOARDS

01 CARPET
02 UNDERLAYER
03 HARBOARD
04 ASSUMED ORIGINAL PINE
BOARD RETAINED -
TO BE VERIFIED DURING
CONSTRUCTION
05 EXISTING JOISTS
(POSSIBLY ORIGINAL)

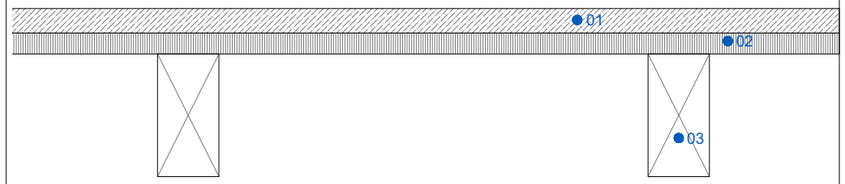


# EFL-02

1:5

ASSUMED EXISTING TIMBER
FLOOR ON BOARDS

01 ENGINEERED BOARD OF
RECENT MANUFACTURE
02 ASSUMED ORIGINAL PINE
BOARD RETAINED -
TO BE VERIFIED DURING
CONSTRUCTION
03 EXISTING JOISTS
(POSSIBLY ORIGINAL)

## PROPOSED FLOOR DETAILS

SCALE 1:5

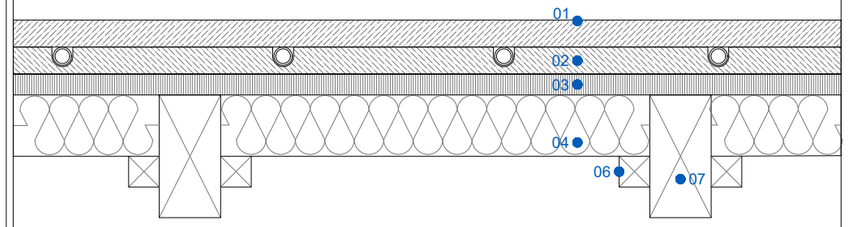


# FT-01

1:5

ENGINEERED FLOOR
ON UNDERFLOOR HEATING
GROUND FLOOR

01 ENGINEERED BOARD
02 22MM UNDERFLOOR
HEATING SYSTEM
TIMOLEON TORON SYSTEM
03 ASSUMED ORIGINAL PINE
BOARD RETAINED -
TO BE VERIFIED DURING
CONSTRUCTION
04 50MM INSULATION
06 BATTENS
07 EXISTING JOISTS


**LBMV architects**

Luigi Montefusco Ltd
72 Haverstock Hill
NW3 2BE London
M+44 (0) 7837344073
T+44 (0) 207 483 3880


| DRAWINGS STATUS | | DRAWN | CHECKED |
|---|---|---|---|
| PLANNING PERMISSION | A3 | UG - CA | LM |
| PROJECT TITLE | | DATE | SCALE |
| REAR EXTENSION | | 06.02.2018 | 1:5@A3 |
| | | DRAWING TITLE | |
| | | DETAILS | |
| 12 Lyndhurst Gardens<br>NW3 5NR | | JOB NO | DRAWING NO |
| | | 0066 | A4001 |

GENERAL NOTE
- This drawing should be removed from currency immediately when a revised version is issued.
- All dimensions to be checked on site by the contractor. Discrepancies to be reported before proceeding with the works.
- This drawing is copyrighted.
- All dimensions in mm's.

LEGEND

| | | | |
|---|---|---|---|
| 1.100 | 0 | 1 | 5 m |
| 1.50 | 0 | 1 | 2 m |
| 1.25 | 0 | 100 | 1000mm |
| 1.20 | 0 | 100 | 1000 mm |
| 1.10 | 0 | 100 | 500 mm |
| 1.5 | 0 | 100 | 200 mm |

| REV | DESCRIPTION | DATE | NAME |
|---|---|---|---|

## EXISTING CEILING DETAIL - LOWER GROUND FLOOR (LIVING ROOM - HOME OFFICE) 1:5

## PROPOSED CEILING DETAIL - LOWER GROUND FLOOR (LIVING ROOM - HOME OFFICE) 1:5

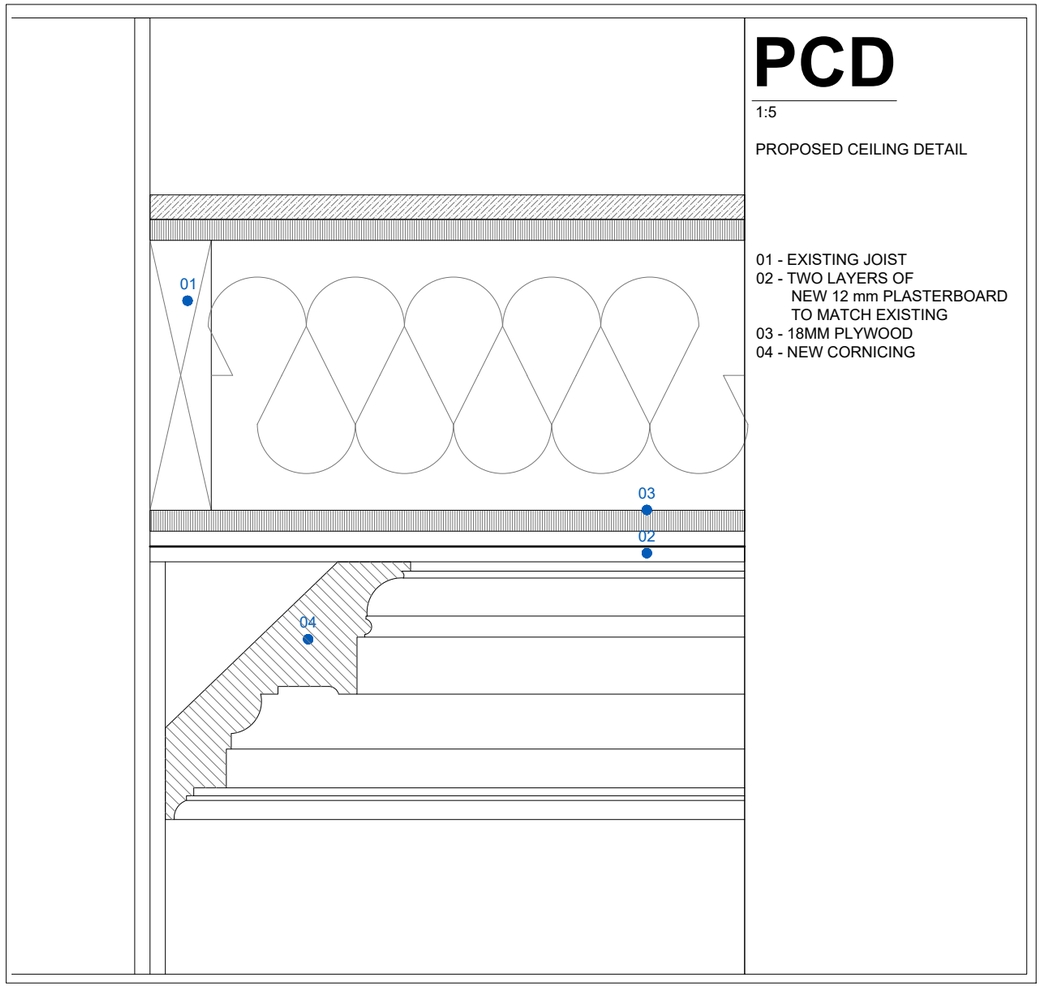


# PCD

1:5

PROPOSED CEILING DETAIL

01 - EXISTING JOIST
02 - TWO LAYERS OF
NEW 12 mm PLASTERBOARD
TO MATCH EXISTING
03 - 18MM PLYWOOD
04 - NEW CORNICING


**LBMV architects**

Luigi Montefusco Ltd
72 Haverstock Hill
NW3 2BE London
M+44 (0) 7837344073
T+44 (0) 207 483 3880


| DRAWINGS STATUS | | DRAWN | CHECKED |
|---|---|---|---|
| PLANNING PERMISSION | A3 | UG - CA | LM |
| PROJECT TITLE | | DATE | SCALE |
| REAR EXTENSION | | 06.02.2018 | 1:5@A3 |
| | | DRAWING TITLE | |
| | | DETAILS | |
| 12 Lyndhurst Gardens<br>NW3 5NR | | JOB NO | DRAWING NO |
| | | 0066 | A4002 |

GENERAL NOTE

- This drawing should be removed from currency immediately when a revised version is issued.
- All dimensions to be checked on site by the contractor. Discrepancies to be reported before proceeding with the works.
- This drawing is copyrighted.
- All dimensions in mm's.

LEGEND

1.100 0 1 5 m
1.50 0 1 2 m
1.25 0 100 1000mm
1.20 0 100 1000 mm
1.10 0 100 500 mm
1.5 0 100 200 mm

| REV | DESCRIPTION | DATE | NAME |
|---|---|---|---|

## EXISTING SKIRTING - LOWER GROUND FLOOR (LIVING ROOM-OFFICE-LOBBY)

## PROPOSED SKIRTING - LOWER GROUND FLOOR (LIVING ROOM-OFFICE-LOBBY)

SCALE 1:5

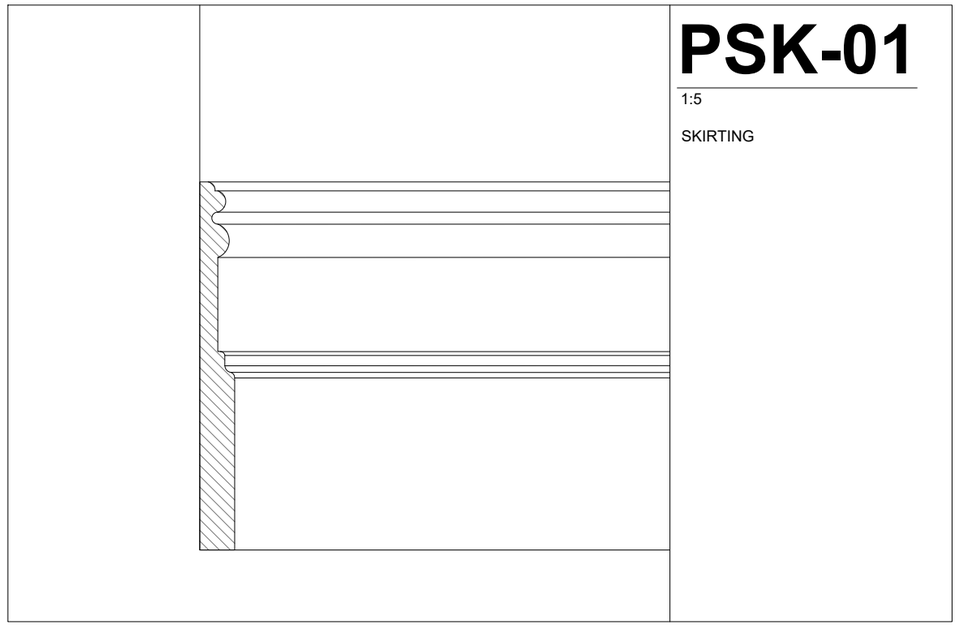



**LBMV architects**

Luigi Montefusco Ltd
72 Haverstock Hill
NW3 2BE London
M+44 (0) 7837344073
T+44 (0) 207 483 3880


| DRAWINGS STATUS | | DRAWN | CHECKED |
|---|---|---|---|
| PLANNING PERMISSION | A3 | UG - CA | LM |
| PROJECT TITLE | | DATE | SCALE |
| REAR EXTENSION | | 06.02.2018 | 1:5@A3 |
| | | DRAWING TITLE | |
| | | DETAILS | |
| 12 Lyndhurst Gardens<br>NW3 5NR | | JOB NO | DRAWING NO |
| | | 0066 | A4003 |

GENERAL NOTE
- This drawing should be removed from currency immediately when a revised version is issued.
- All dimensions to be checked on site by the contractor. Discrepancies to be reported before proceeding with the works.
- This drawing is copyrighted.
- All dimensions in mm's.

LEGEND

| | | | |
|---|---|---|---|
| 1.100 | 0 | 1 | 5 m |
| 1.50 | 0 | 1 | 2 m |
| 1.25 | 0 | 100 | 1000mm |
| 1.20 | 0 | 100 | 1000 mm |
| 1.10 | 0 | 100 | 500 mm |
| 1.5 | 0 | 100 | 200 mm |

| REV | DESCRIPTION | DATE | NAME |
|---|---|---|---|

# TRADITIONAL DOOR DETAILS - A-DR-E- ENTRANCE

SCALE 1:20

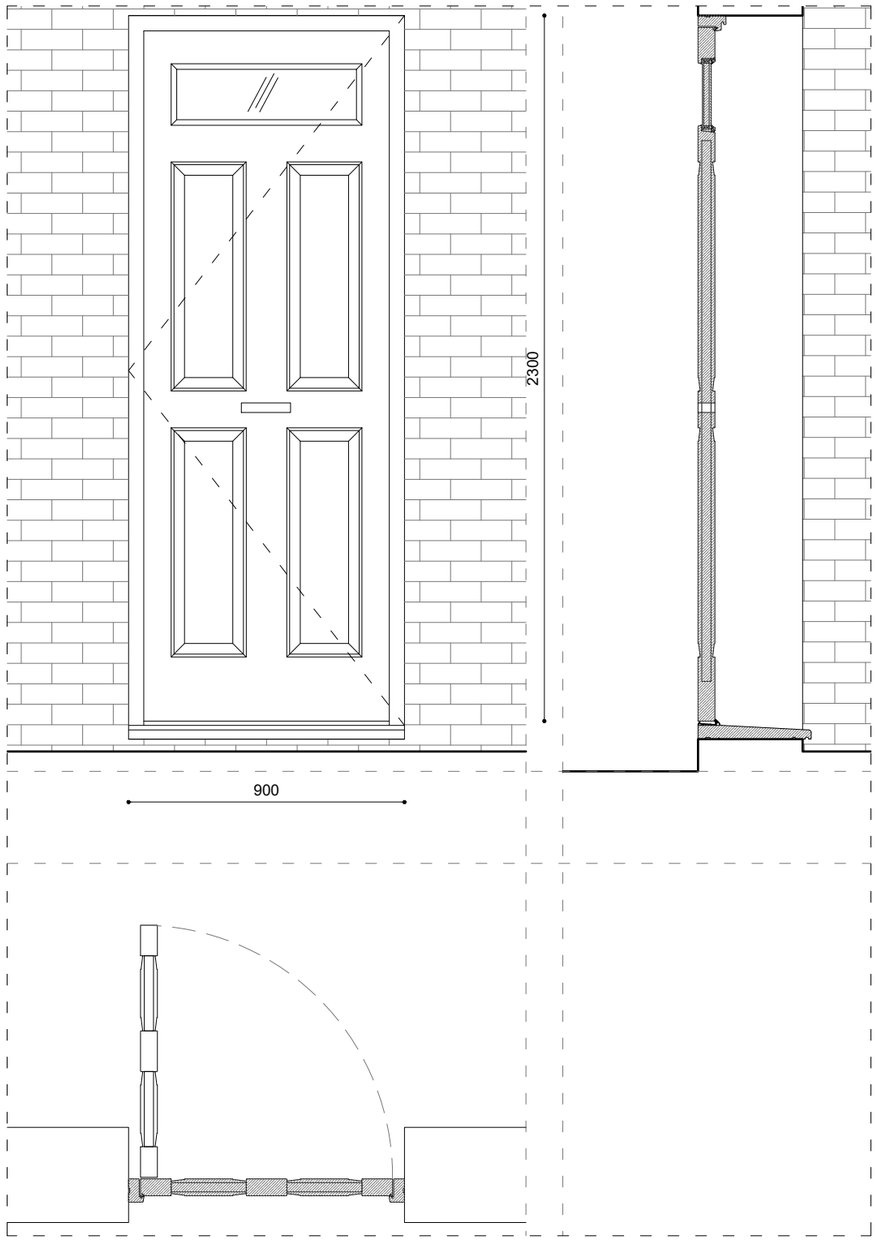


FRAME DETAILS

SCALE 1:5

HEAD SECTION

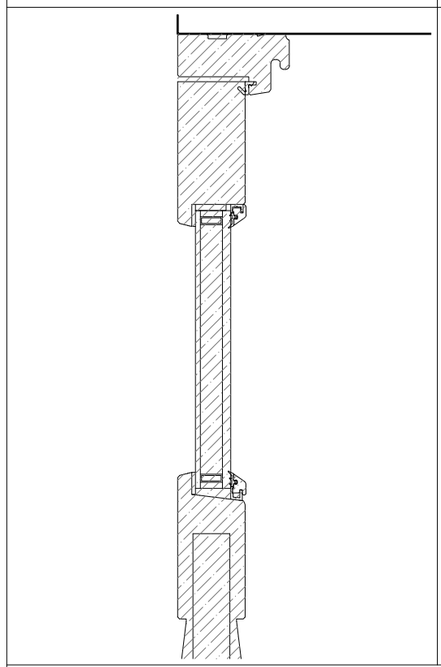

MIDDLE SECTION

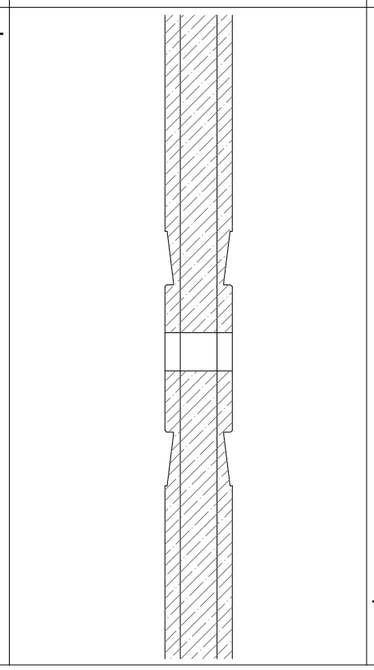

THRESHOLD SECTION

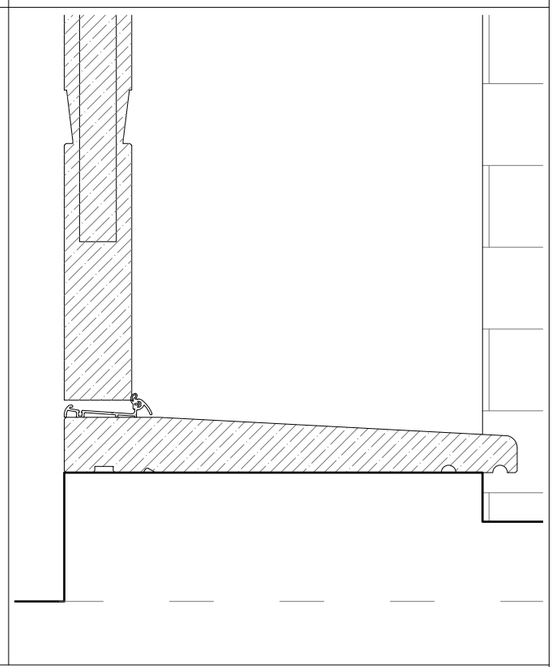

PLAN SECTION

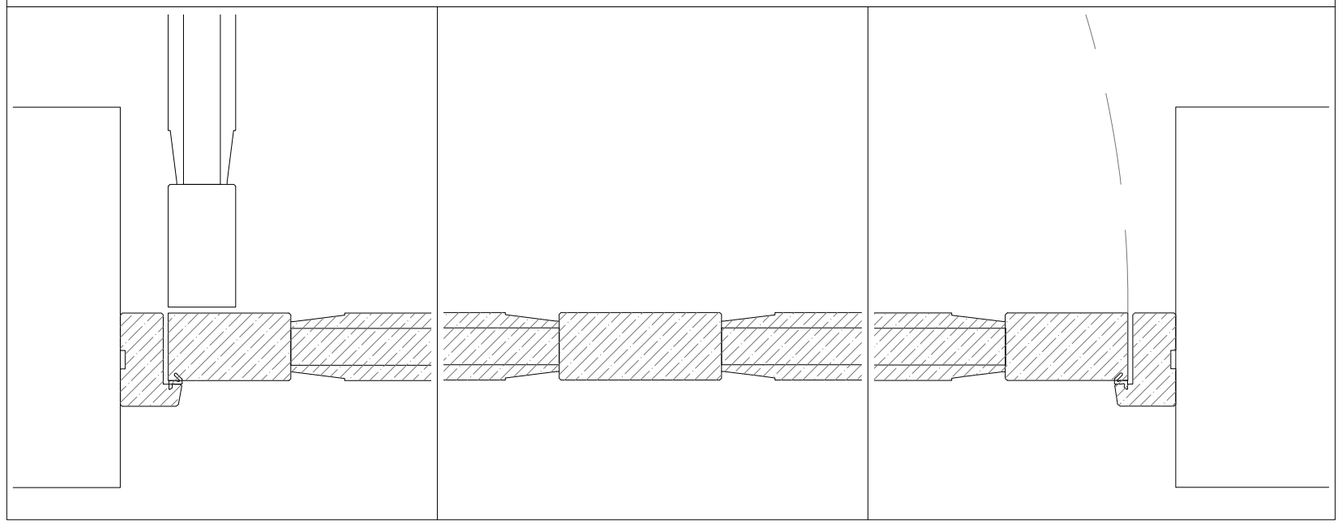


**LBMV architects**

Luigi Montefusco Ltd
72 Haverstock Hill
NW3 2BE London
M+44 (0) 7837344073
T+44 (0) 207 483 3880


| DRAWINGS STATUS | | DRAWN | CHECKED |
|---|---|---|---|
| PLANNING PERMISSION | A3 | UG - CA | LM |
| PROJECT TITLE | | DATE | SCALE |
| REAR EXTENSION | | 06.02.2018 | 1:20@A3<br>1:5@A3 |
| | | DRAWING TITLE | |
| | | DETAILS | |
| 12 Lyndhurst Gardens<br>NW3 5NR | | JOB NO | DRAWING NO |
| | | 0066 | A4008 |

GENERAL NOTE

- This drawing should be removed from currency immediately when a revised version is issued.
- All dimensions to be checked on site by the contractor. Discrepancies to be reported before proceeding with the works.
- This drawing is copyrighted.
- All dimensions in mm's.

LEGEND

| | | | |
|---|---|---|---|
| 1.100 | 0 | 1 | 5 m |
| 1.50 | 0 | 1 | 2 m |
| 1.25 | 0 | 100 | 1000mm |
| 1.20 | 0 | 100 | 1000 mm |
| 1.10 | 0 | 100 | 500 mm |
| 1.5 | 0 | 100 | 200 mm |

| REV | DESCRIPTION | DATE | NAME |
|---|---|---|---|

# TRADITIONAL DOOR DETAILS - ALL INTERNAL DOORS

SCALE 1:20

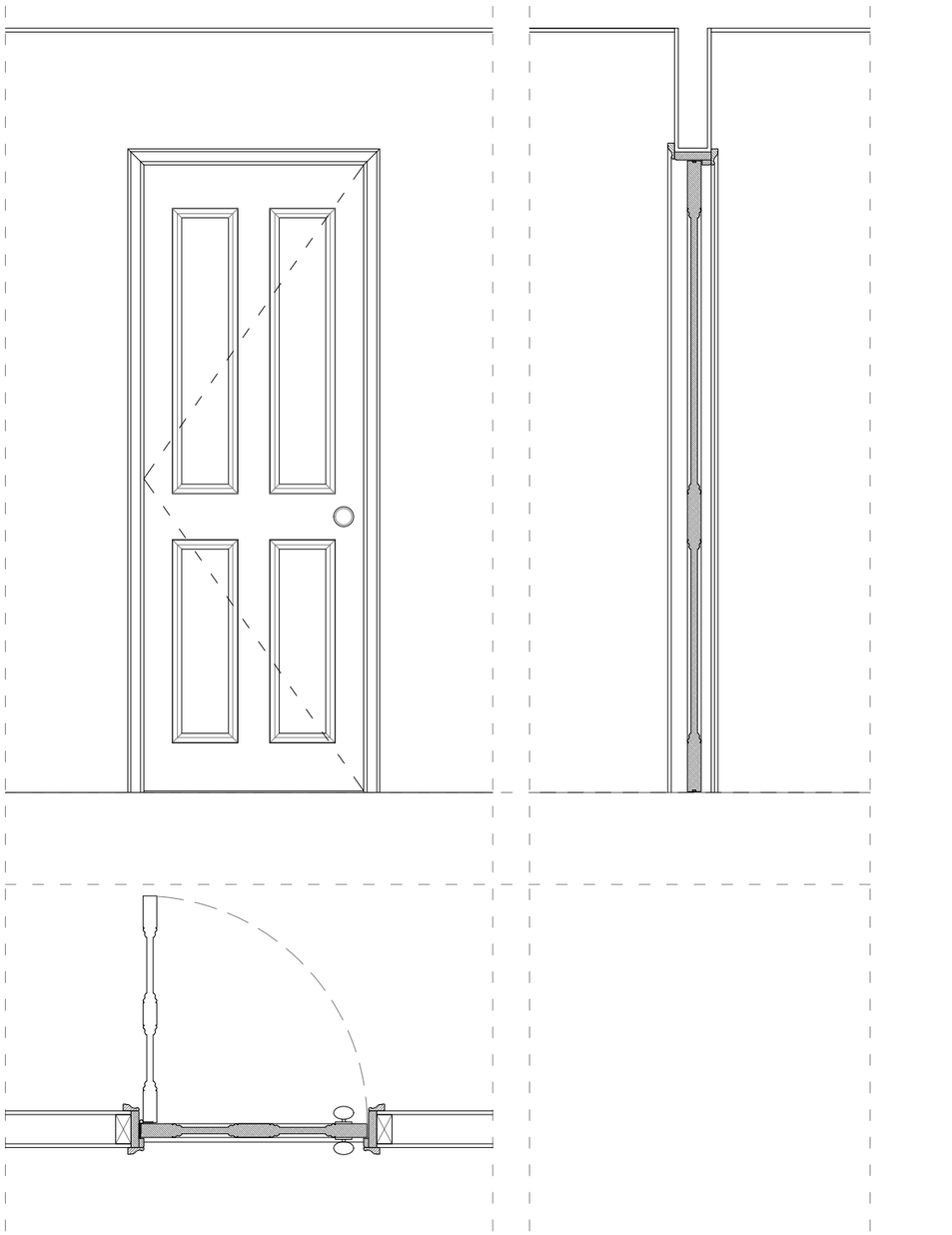

FRAME DETAILS

SCALE 1:5

HEAD SECTION

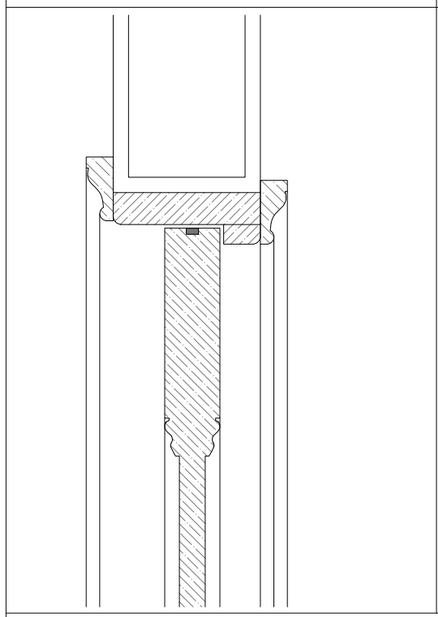

MIDDLE SECTION

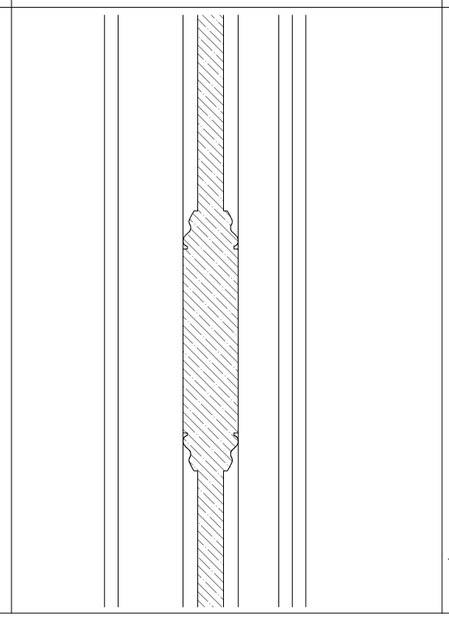

THRESHOLD SECTION

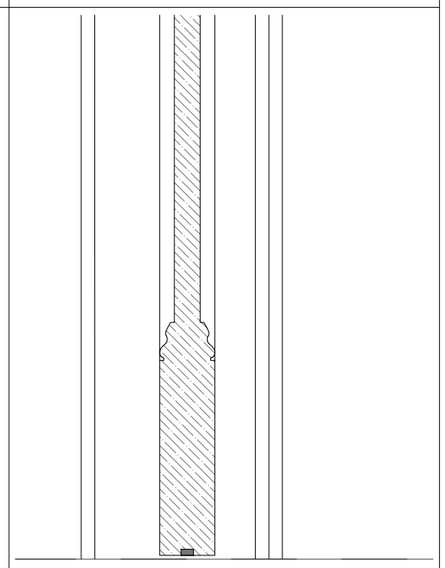

PLAN SECTION

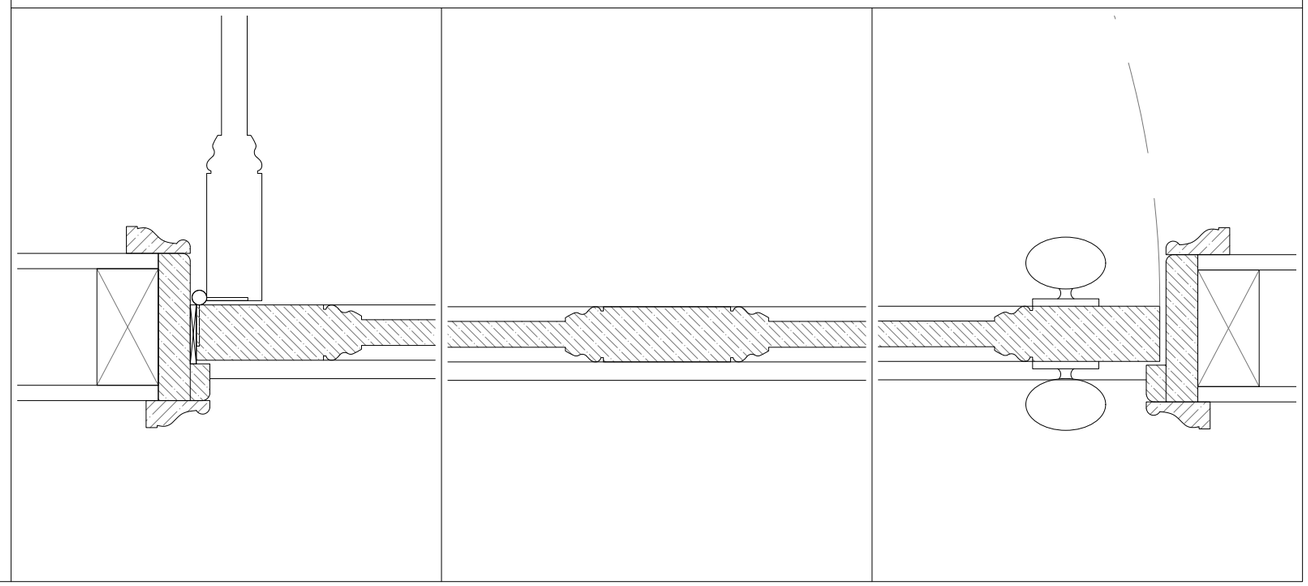


**LBMV architects**

Luigi Montefusco Ltd
72 Haverstock Hill
NW3 2BE London
M+44 (0) 7837344073
T+44 (0) 207 483 3880


| DRAWINGS STATUS | | DRAWN | CHECKED |
|---|---|---|---|
| PLANNING PERMISSION | A3 | UG - CA | LM |
| PROJECT TITLE | | DATE | SCALE |
| REAR EXTENSION | | 06.02.2018 | 1:20@A3<br>1:5@A3 |
| | | DRAWING TITLE | |
| | | DETAILS | |
| 12 Lyndhurst Gardens<br>NW3 5NR | | JOB NO | DRAWING NO |
| | | 0066 | A4005 |

GENERAL NOTE
- This drawing should be removed from currency immediately when a revised version is issued.
- All dimensions to be checked on site by the contractor. Discrepancies to be reported before proceeding with the works.
- This drawing is copyrighted.
- All dimensions in mm's.

LEGEND

| | | | |
|---|---|---|---|
| 1.100 | 0 | 1 | 5 m |
| 1.50 | 0 | 1 | 2 m |
| 1.25 | 0 | 100 | 1000mm |
| 1.20 | 0 | 100 | 1000 mm |
| 1.10 | 0 | 100 | 500 mm |
| 1.5 | 0 | 100 | 200 mm |

| REV | DESCRIPTION | DATE | NAME |
|---|---|---|---|

# PROPOSED TRADITIONAL WINDOWS DETAIL A-WD-01

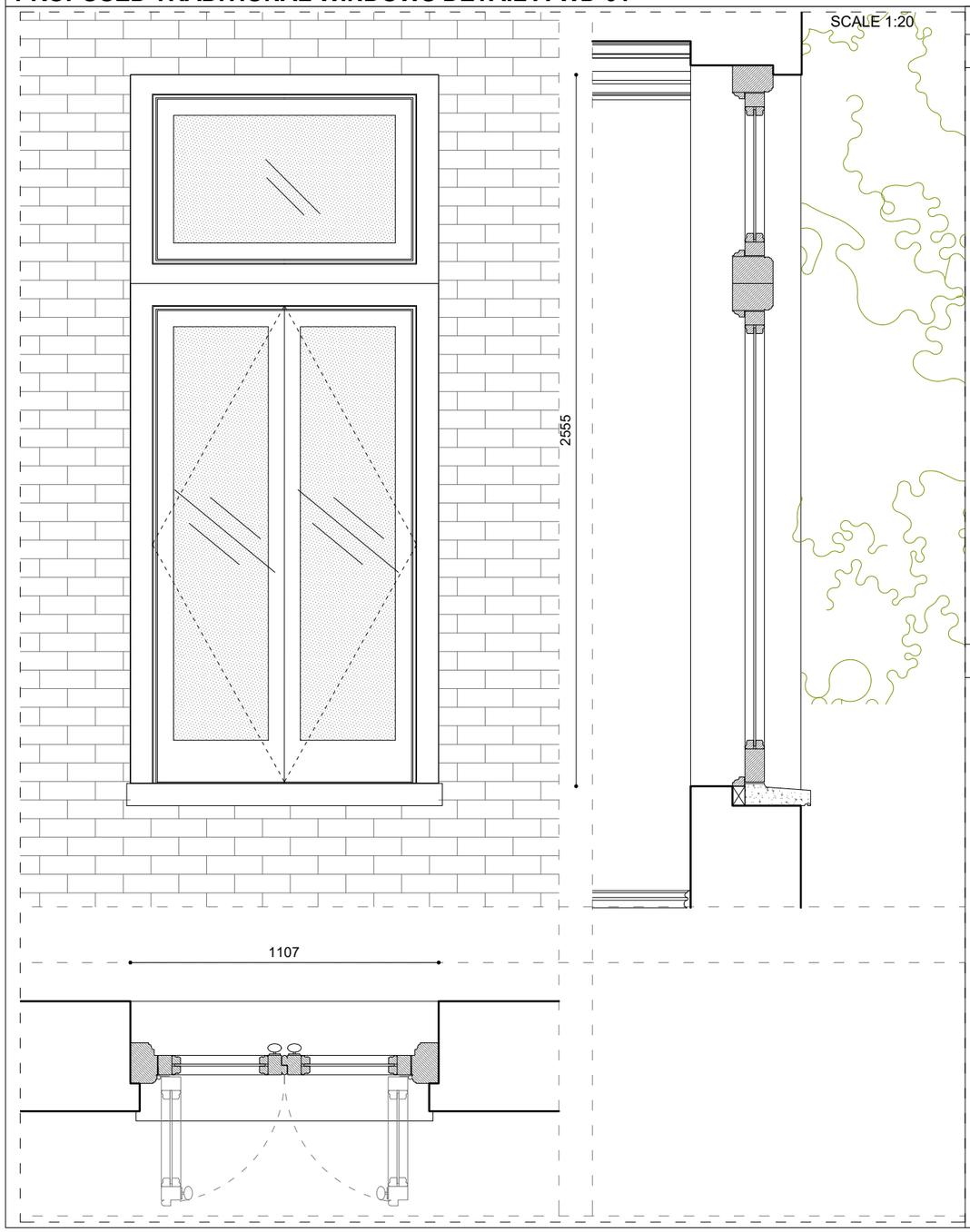


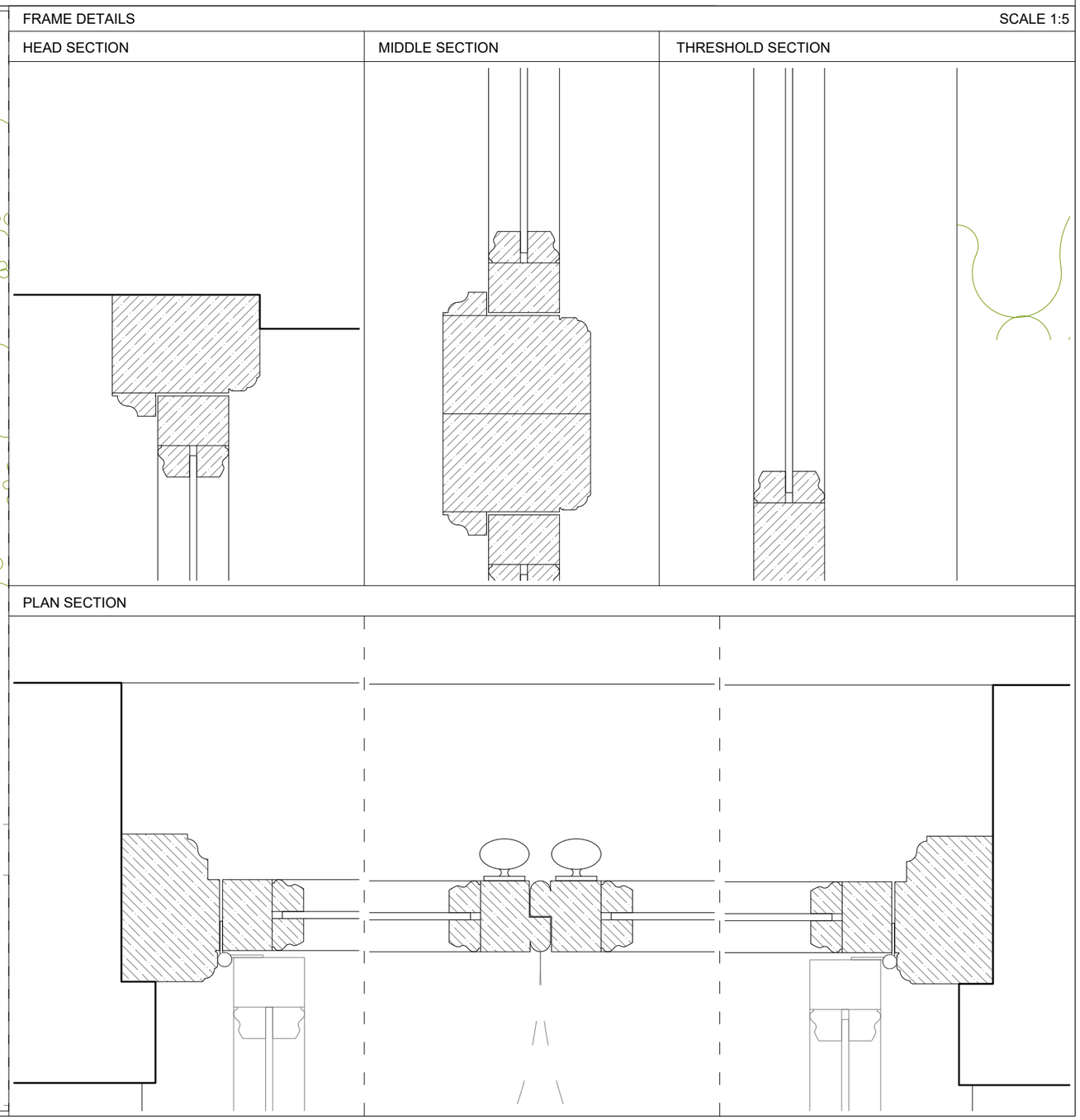



**LBMV architects**

Luigi Montefusco Ltd
72 Haverstock Hill
NW3 2BE London
M+44 (0) 7837344073
T+44 (0) 207 483 3880


| DRAWINGS STATUS | | DRAWN | CHECKED |
|---|---|---|---|
| PLANNING PERMISSION | A3 | UG - CA | LM |
| PROJECT TITLE | | DATE | SCALE |
| REAR EXTENSION | | 06.02.2018 | 1:20@A3<br>1:5@A3 |
| | | DRAWING TITLE | |
| | | DETAILS | |
| 12 Lyndhurst Gardens<br>NW3 5NR | | JOB NO | DRAWING NO |
| | | 0066 | A4006 |

GENERAL NOTE
- This drawing should be removed from currency immediately when a revised version is issued.
- All dimensions to be checked on site by the contractor. Discrepancies to be reported before proceeding with the works.
- This drawing is copyrighted.
- All dimensions in mm's.

LEGEND

| | | | |
|---|---|---|---|
| 1.100 | 0 | 1 | 5 m |
| 1.50 | 0 | 1 | 2 m |
| 1.25 | 0 | 100 | 1000mm |
| 1.20 | 0 | 100 | 1000 mm |
| 1.10 | 0 | 100 | 500 mm |
| 1.5 | 0 | 100 | 200 mm |

| REV | DESCRIPTION | DATE | NAME |
|---|---|---|---|

# PROPOSED TRADITIONAL WINDOWS DETAIL A-WD-02

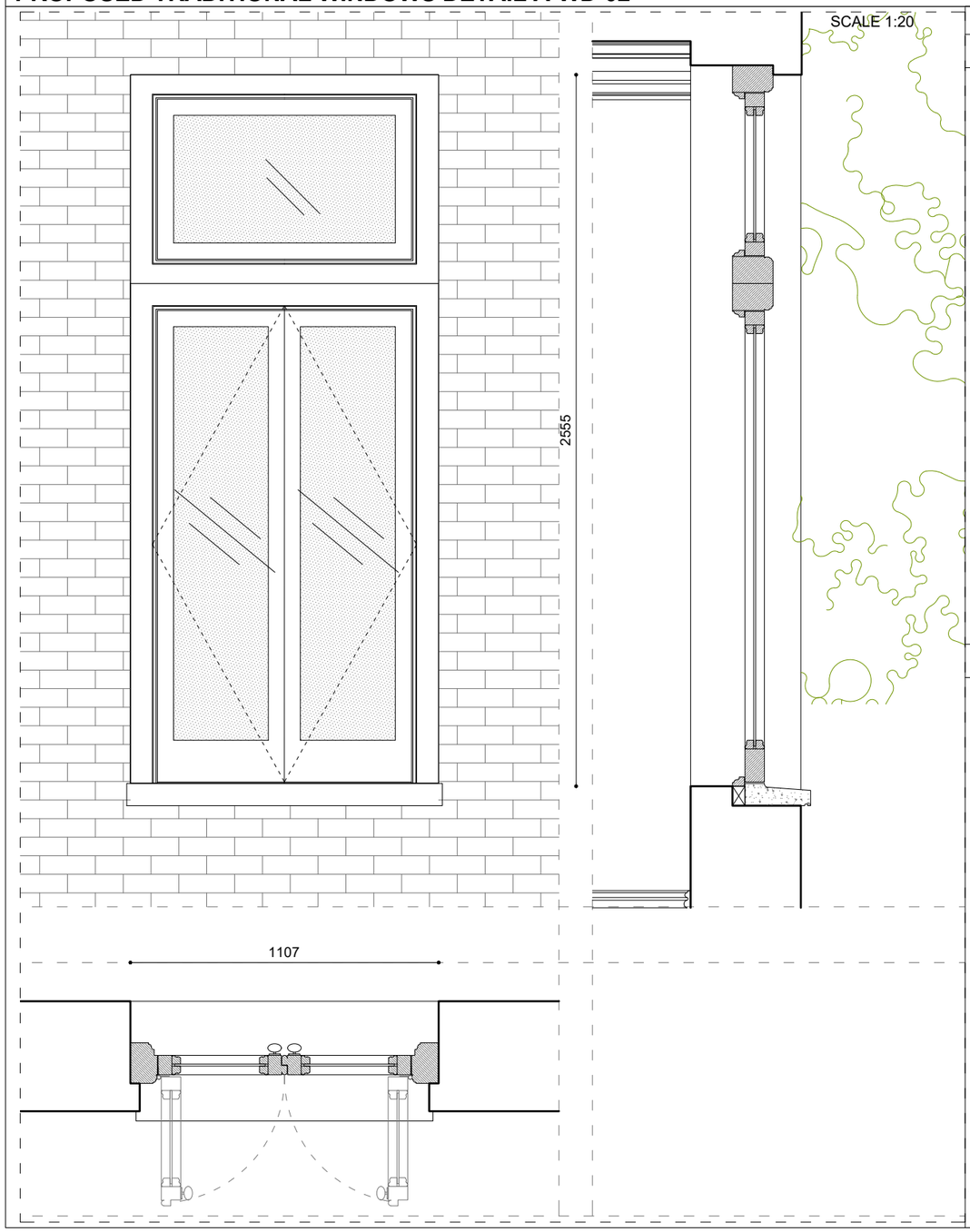


FRAME DETAILS

SCALE 1:5

HEAD SECTION

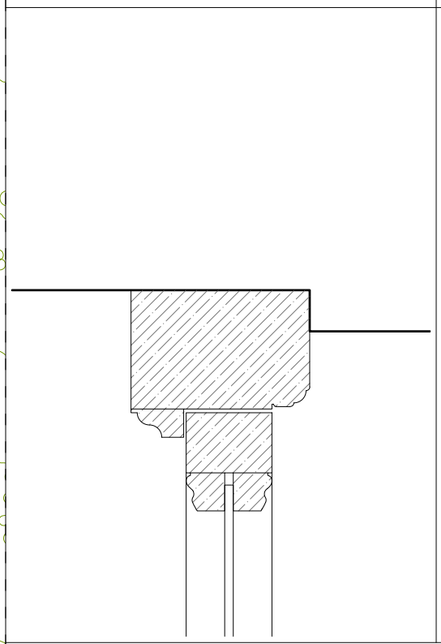

MIDDLE SECTION

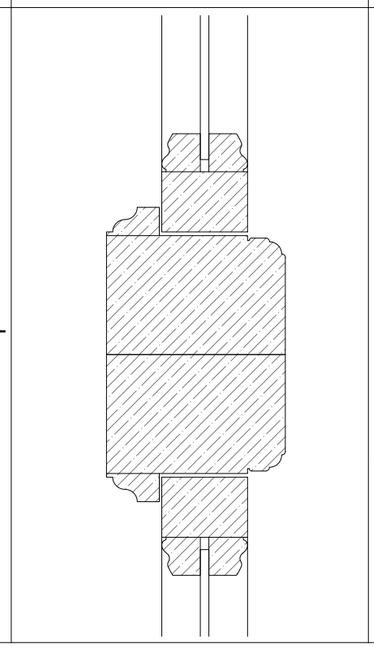

THRESHOLD SECTION

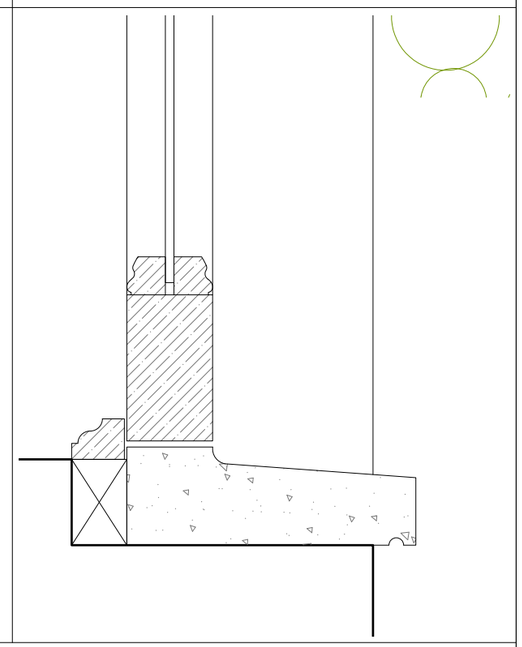

PLAN SECTION

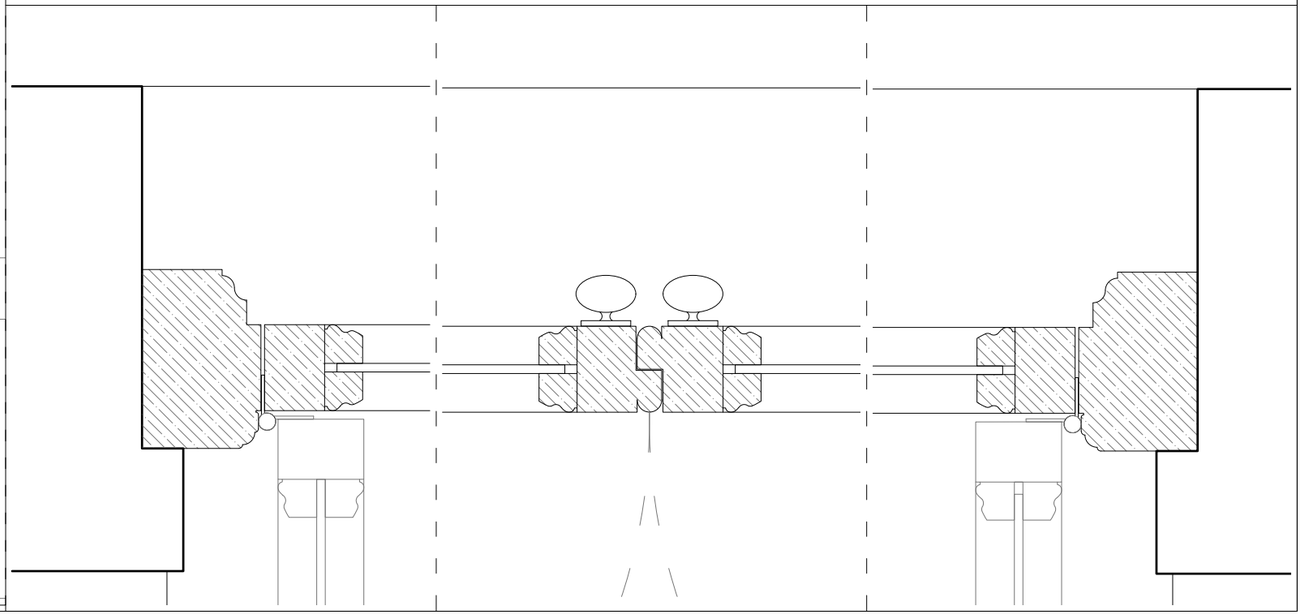


**LBMV architects**

Luigi Montefusco Ltd
72 Haverstock Hill
NW3 2BE London
M+44 (0) 7837344073
T+44 (0) 207 483 3880


| DRAWINGS STATUS | | DRAWN | CHECKED |
|---|---|---|---|
| PLANNING PERMISSION | A3 | UG - CA | LM |
| PROJECT TITLE | | DATE | SCALE |
| REAR EXTENSION | | 06.02.2018 | 1:20@A3<br>1:5@A3 |
| | | DRAWING TITLE | |
| | | DETAILS | |
| 12 Lyndhurst Gardens<br>NW3 5NR | | JOB NO | DRAWING NO |
| | | 0066 | A4007 |

GENERAL NOTE

- This drawing should be removed from currency immediately when a revised version is issued.
- All dimensions to be checked on site by the contractor. Discrepancies to be reported before proceeding with the works.
- This drawing is copyrighted.
- All dimensions in mm's.

LEGEND

| | | | |
|---|---|---|---|
| 1.100 | 0 | 1 | 5 m |
| 1.50 | 0 | 1 | 2 m |
| 1.25 | 0 | 100 | 1000mm |
| 1.20 | 0 | 100 | 1000 mm |
| 1.10 | 0 | 100 | 500 mm |
| 1.5 | 0 | 100 | 200 mm |

| REV | DESCRIPTION | DATE | NAME |
|---|---|---|---|

# PROPOSED TRADITIONAL WINDOWS DETAIL A-WD-05

SCALE 1:20

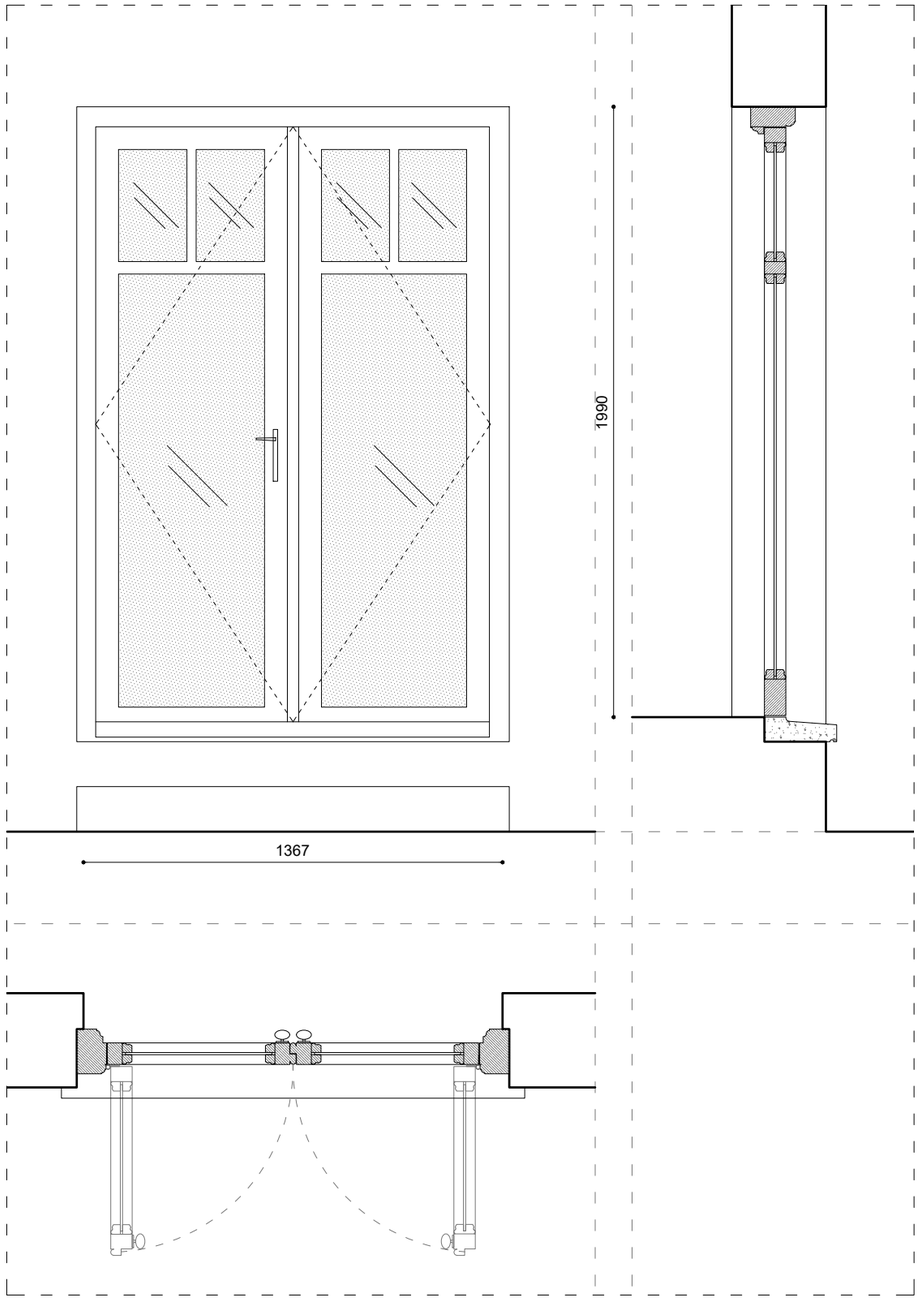


FRAME DETAILS

SCALE 1:5

HEAD SECTION

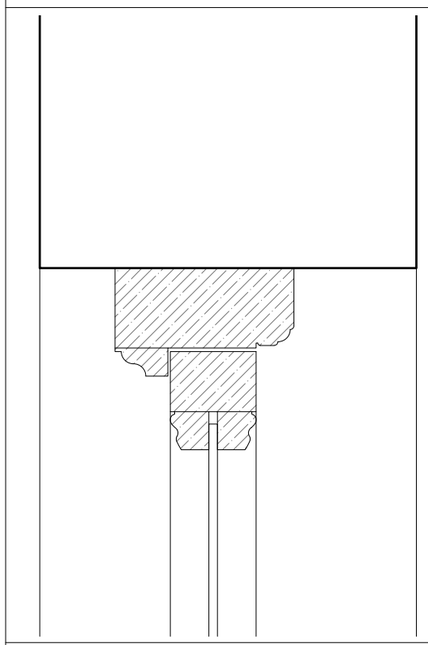

MIDDLE SECTION

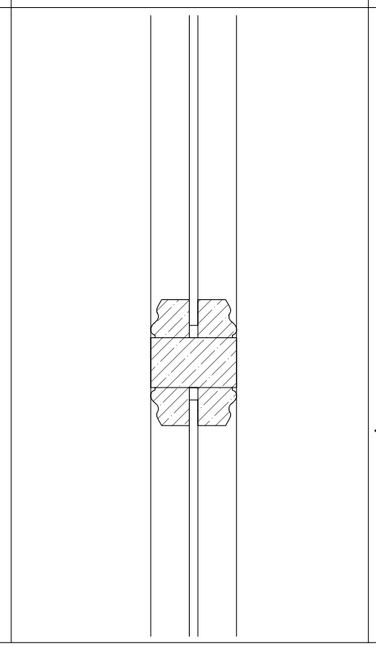

THRESHOLD SECTION

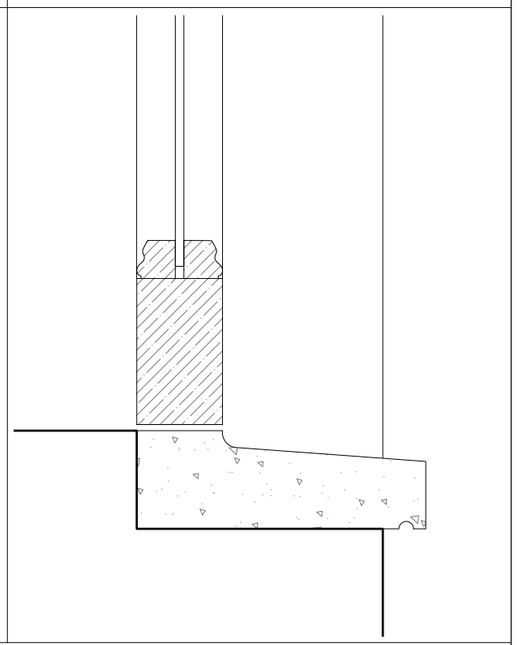

PLAN SECTION

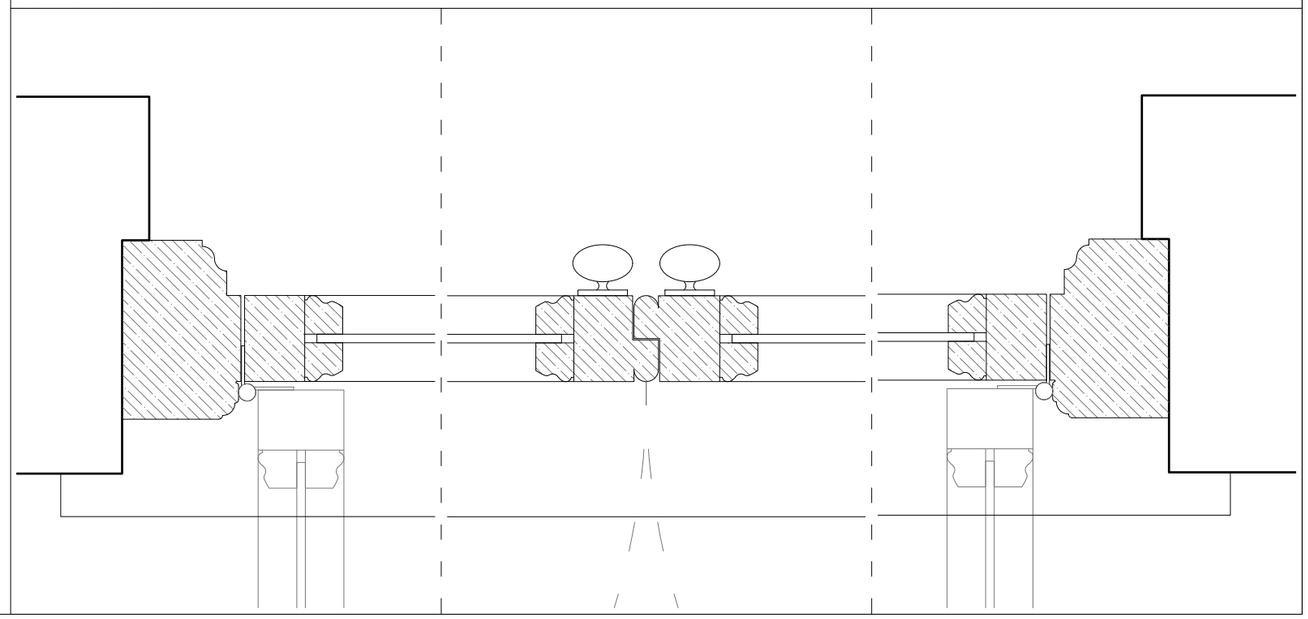


**LBMV architects**

Luigi Montefusco Ltd
72 Haverstock Hill
NW3 2BE London
M+44 (0) 7837344073
T+44 (0) 207 483 3880


| DRAWINGS STATUS | | DRAWN | CHECKED |
|---|---|---|---|
| PLANNING PERMISSION | A3 | UG - CA | LM |
| PROJECT TITLE | | DATE | SCALE |
| REAR EXTENSION | | 06.02.2018 | 1:20@A3<br>1:5@A3 |
| | | DRAWING TITLE | |
| 12 Lyndhurst Gardens<br>NW3 5NR | | DETAILS | |
| | | JOB NO | DRAWING NO |
| | | 0066 | A4008 |

GENERAL NOTE
- This drawing should be removed from currency immediately when a revised version is issued.
- All dimensions to be checked on site by the contractor. Discrepancies to be reported before proceeding with the works.
- This drawing is copyrighted.
- All dimensions in mm's.

LEGEND

| | | | |
|---|---|---|---|
| 1.100 | 0 | 1 | 5 m |
| 1.50 | 0 | 1 | 2 m |
| 1.25 | 0 | 100 | 1000mm |
| 1.20 | 0 | 100 | 1000 mm |
| 1.10 | 0 | 100 | 500 mm |
| 1.5 | 0 | 100 | 200 mm |

| REV | DESCRIPTION | DATE | NAME |
|---|---|---|---|

# PROPOSED GARDEN OFFICE

SCALE 1:50

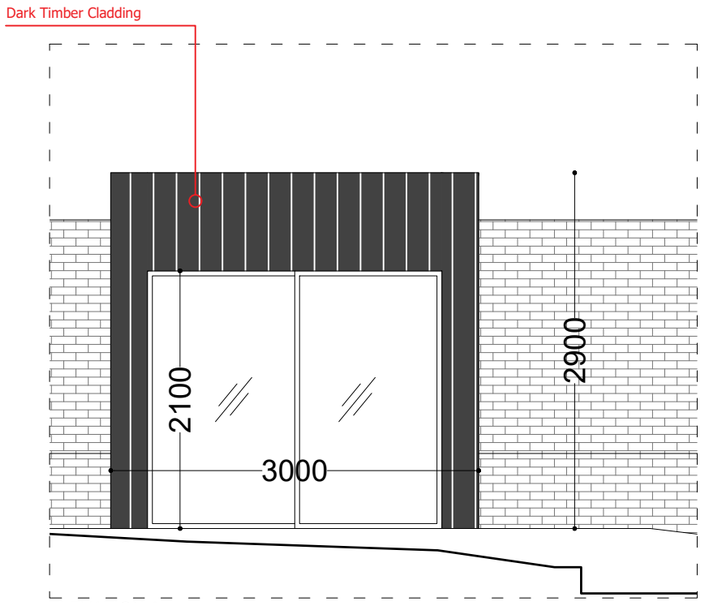


ELEVATION A

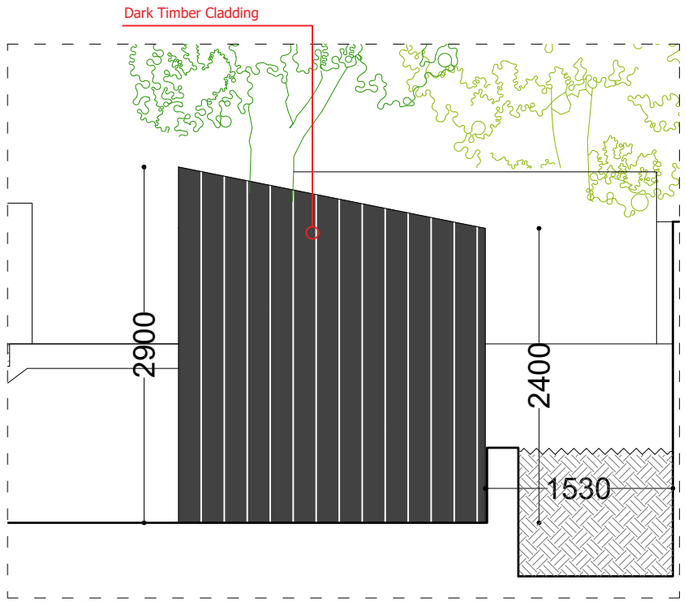


ELEVATION B

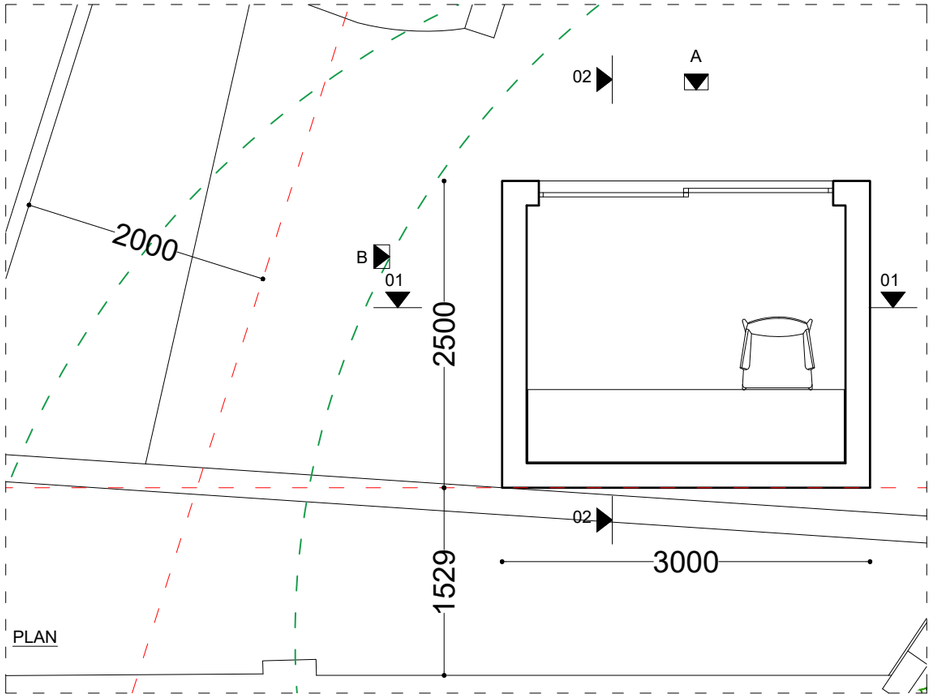


PLAN

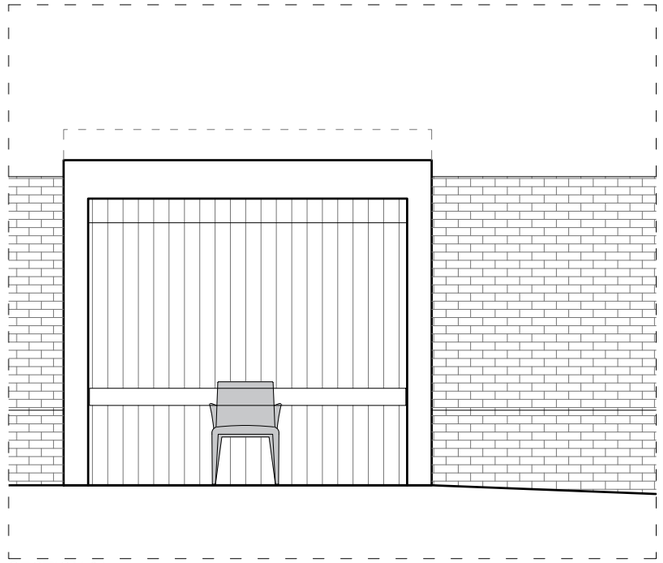

SECTION 01

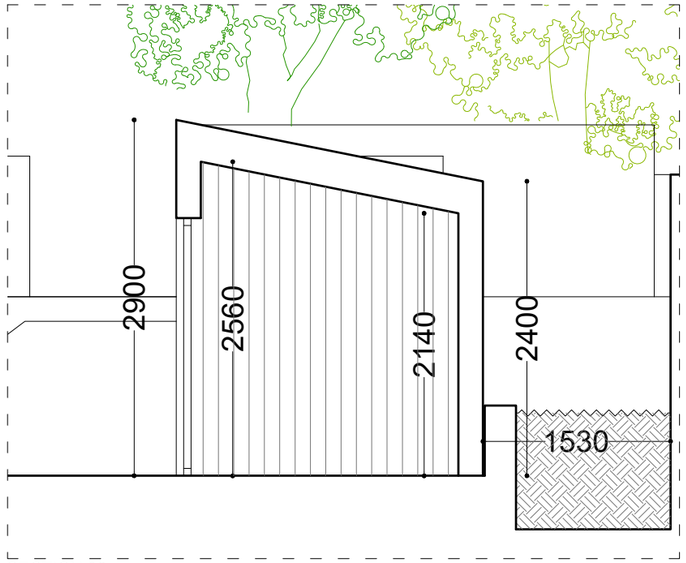


SECTION 02


**LBMV architects**

Luigi Montefusco Ltd
72 Haverstock Hill
NW3 2BE London
M+44 (0) 7837344073
T+44 (0) 207 483 3880


| DRAWINGS STATUS | | DRAWN | CHECKED |
|---|---|---|---|
| PLANNING PERMISSION | A3 | UG - CA | LM |
| PROJECT TITLE | | DATE | SCALE |
| REAR EXTENSION | | 06.02.2018 | 1:50@A3 |
| | | DRAWING TITLE | |
| | | DETAILS | |
| 12 Lyndhurst Gardens<br>NW3 5NR | | JOB NO | DRAWING NO |
| | | 0066 | A4009 |

GENERAL NOTE

- This drawing should be removed from currency immediately when a revised version is issued.
- All dimensions to be checked on site by the contractor. Discrepancies to be reported before proceeding with the works.
- This drawing is copyrighted.
- All dimensions in mm's.

LEGEND

| | | | |
|---|---|---|---|
| 1.100 | 0 | 1 | 5 m |
| 1.50 | 0 | 1 | 2 m |
| 1.25 | 0 | 100 | 1000mm |
| 1.20 | 0 | 100 | 1000 mm |
| 1.10 | 0 | 100 | 500 mm |
| 1.5 | 0 | 100 | 200 mm |

| REV | DESCRIPTION | DATE | NAME |
|---|---|---|---|