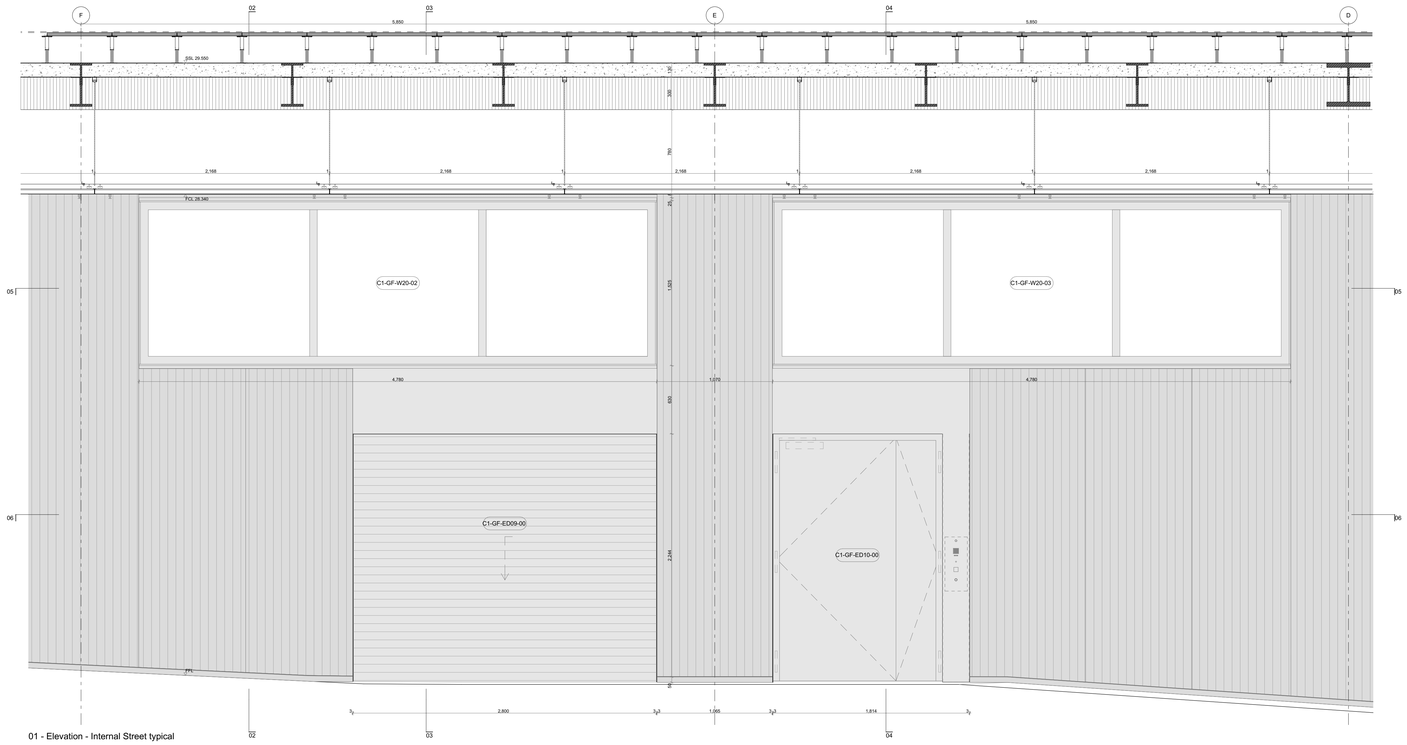

01 - Elevation - Internal Street typical

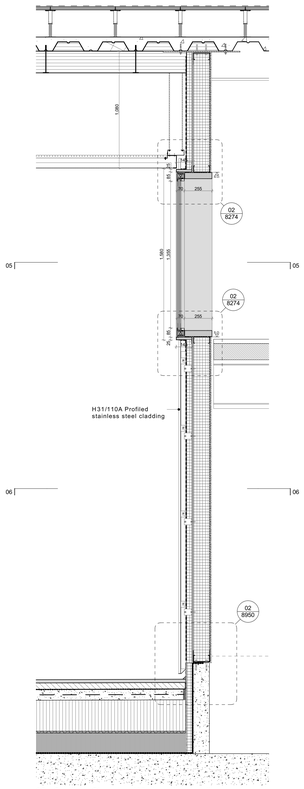

02 - Section - Clerestory Window above wall

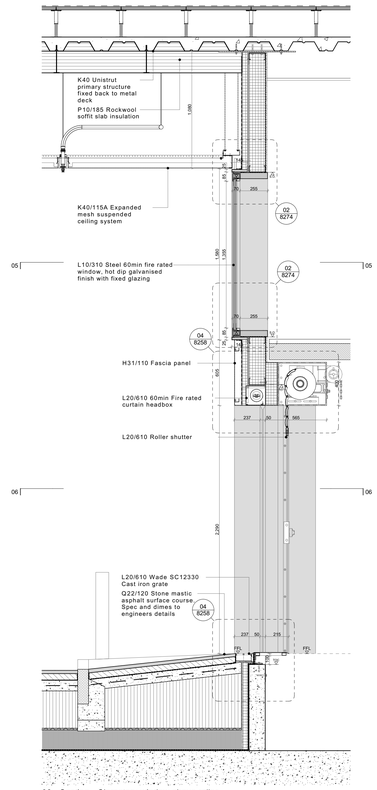

03 - Section - Clerestory window above roller shutter

General notes:
All dimensions are approximate and subject to a full measured survey
All drawings to be read in conjunction with Structural Engineers and Services Engineers drawings. Any discrepancies are to be highlighted and brought to the attention of the Architects.

Health and safety notes:

Manual handling
Avoid as far as reasonably practicable hazardous handling operations, including heavy lifting loads and working over shoulder height.

Confined space / Working at height
Safe access to be provided when working at height.
Be aware of restrictions placed on movement when working with temporary access equipment.

Temporary propping
Care to be taken when fixing vertical elements to allow for secure fixing when fitting.

Personal protective equipment
Appropriate equipment to be worn at all times while on site.

Material hatches:

- Screed
- Blockwork
- Stone
- Insulation, Soft
- Insulation, Rigid
- PPC Alluminium finish
- Galvanised Steel finish
- Dropped Ceiling
- Brick
- Concrete, Precast
- Concrete, In-situ
- Steel
- Stainless Steel finish

Notes:

REV ID	DATE	CHANGE ID	REASON FOR ISSUE	NAME
T04	11/11/20		Stage 4	KW
C00	21/09/21	C00-A	Dimensions, lineweights, general review	GP
C01	21/01/22	C01-A	Window sizes and facade cooridnaion	TW

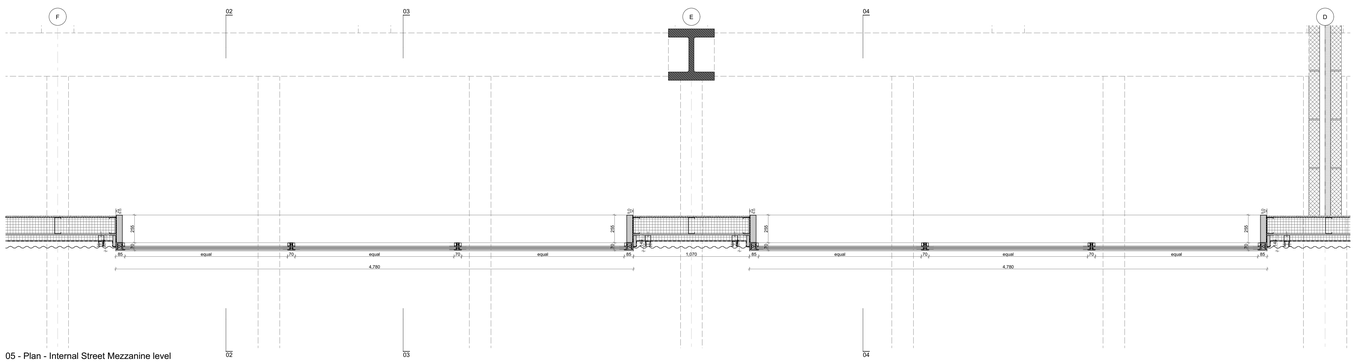

05 - Plan - Internal Street Mezzanine level

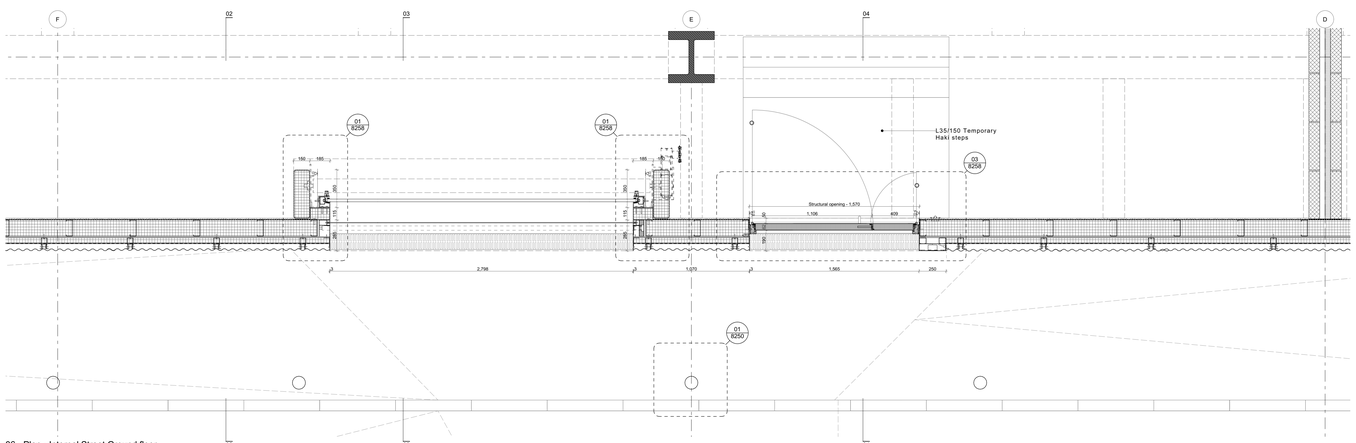

06 - Plan - Internal Street Ground floor

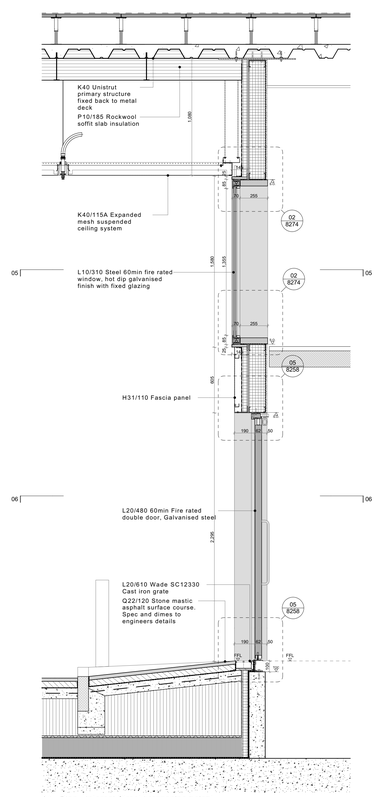

04 - Plan - Internal Street Mezzanine height

Caruso St John Architects

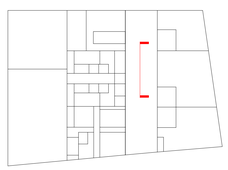

477 St Pancras Commercial Centre

External wall - Elevation - Office Ground - Type 13

CONSTRUCTION

Project No	Author	Unit	Level	Type	Discipline	Number	Status	Revision
477	CSJ	C1	ZZ	DE	A	7031	D2	C01

Scale	Size W x H (mm)	Date	Revised	Drawn	Checked
1:20, 1:100	1189 x 841	02/08/19	21/01/22	TW	JH

Project phase	Project datum
STAGE 05	±0.00 = 0.00 AOD

Client:
W.RE
8 Richmond Mews, London, W1D 3DH

Project manager:
Blackburn & Co.
No 1. Clink Street, London, SE1 9DG

Architect:
Caruso St John Architects LLP
1 Coate Street, London E2 9AG, UK, +44 (0)20 7613 3161, london@carusostjohn.com

Planning consultant:
Gerald Eve
72 Welbeck Street, London, W1G 0AY

Structural engineer:
AKT II
White Collar Factory 1 Old Street Yard London EC1Y 8AF

Building services:
Norman Disney Young
1 Angel Court, London EC2R 7HJ, United Kingdom

Quantity surveyor:
Exigere
Morelands 5-23 Old Street London EC1V 9HL

Registered office: Caruso St John LLP is a Limited Liability Partnership registered in England No. OC315081