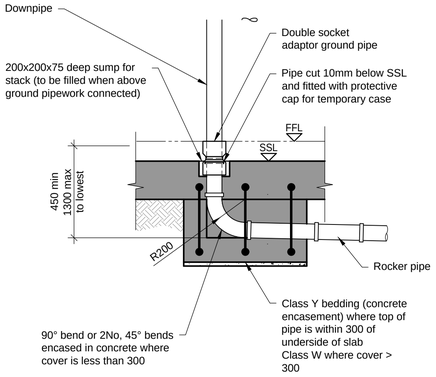

TYPICAL FOUL OR RAINWATER STACK DETAIL

Note:-
The depth of the gully can be increased by up to 300 by fitting a 225 coupling code and a 300 high raising piece code between the frame and the gully body.

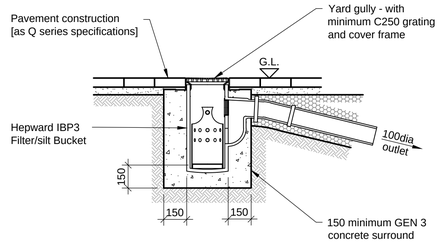

YARD GULLY

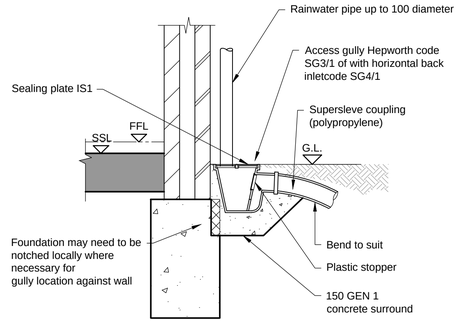

RAINWATER ACCESS GULLY CONNECTION

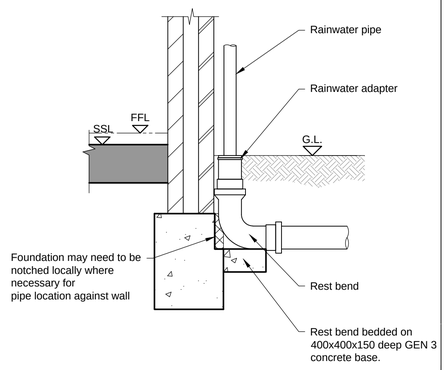

RAINWATER DOWN PIPE TO DRAIN (SURFACE WATER SYSTEM)

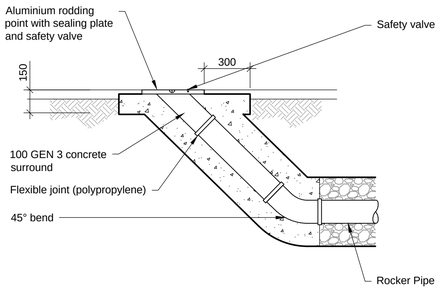

RODDING EYE

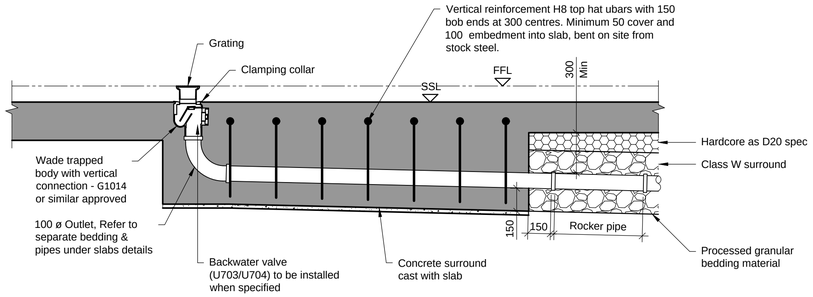

INDICATIVE INTERNAL FLOOR GULLY

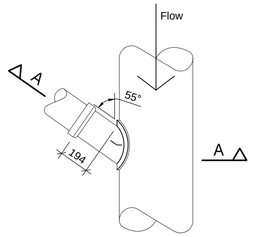

SADDLE CONNECTION - PLAN VIEW

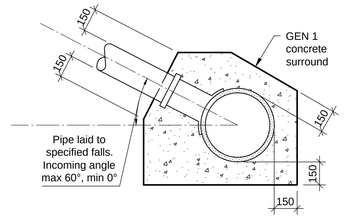

SADDLE CONNECTION SECTION A-A

SCALE 1:20

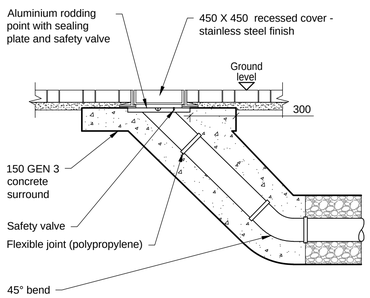

RECESSED RODDING EYE

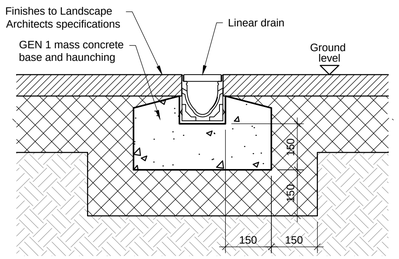

CHANNEL DRAIN DETAIL

SCALE 1:10

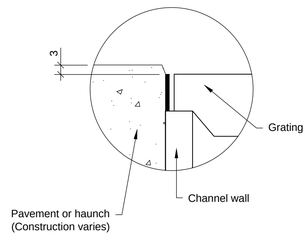

DETAIL - A

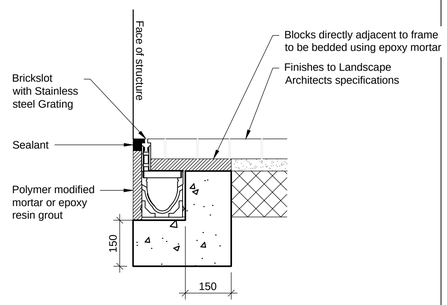

LINEAR SLOT DRAIN AT THRESHOLD DETAIL

SCALE 1:10

In Abeyance

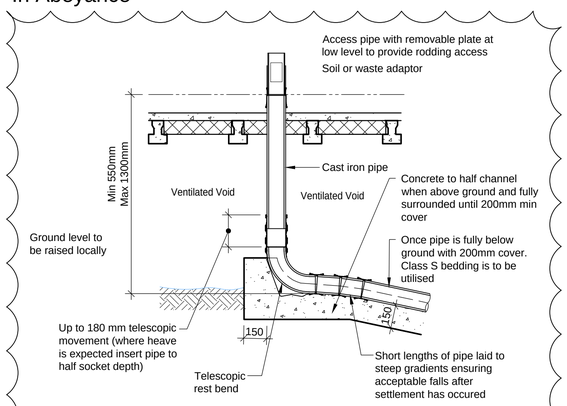

PIPE PENETRATING GROUND FLOOR BEAM & BLOCK B

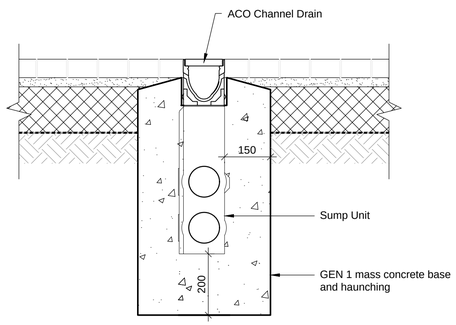

SUMP UNIT CHANNEL DRAIN DETAIL (ACO M100D UNIVERSAL SUMP)

SCALE 1:10

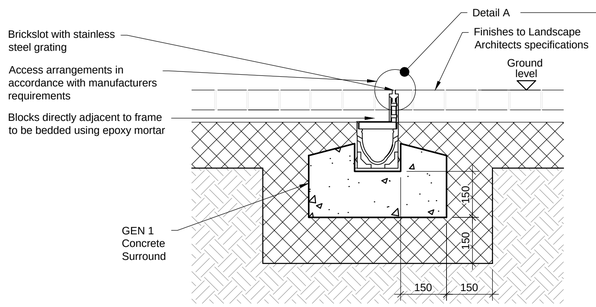

LINEAR SLOT DRAIN DETAIL

SCALE 1:10

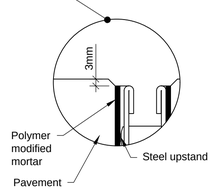

DETAIL - A

NOTES :

1. This drawing is to be read in conjunction with all relevant Architect's, Engineer's and specialists' drawings and specifications.
2. Do not scale from this drawing in either paper or digital form. Use written dimensions only. To check that this drawing has been printed to the intended scale this bar should be 50mm long @ A1 or 25mm long @ A3.
3. Health & Safety :
   All specific drawing notes are to be read in conjunction with the project "Information Pack" and "Site Rules".
4. For general notes refer to Drawing No. 29100 / 0002.

Rev	Date	Drawn	Eng	Amendment
P03	29.10.21	TP	KB	Issued for Stage 3
P02	22.10.21	TP	KB	Contract Issue
P01	16.09.21	AC	KB	Issued for Information

LIDDELL ROAD - PHASE 2

BELOW GROUND DRAINAGE DETAILS
SHEET 5

Status
STAGE 3 ISSUE
NOT FOR CONSTRUCTION

Drawn AH	Eng KB
Scales 1:20 at A1	1:40 at A3
Drawing No 29100 / 6105	Rev P03
Doc Ref. 29100-PAM-ZZ-XX-DR-C-6105	

PRICE&MYERS
Consulting Engineers
37 Alfred Place
London
WC1E 7DP
020 7631 5128
mail@pricemyers.com
www.pricemyers.com