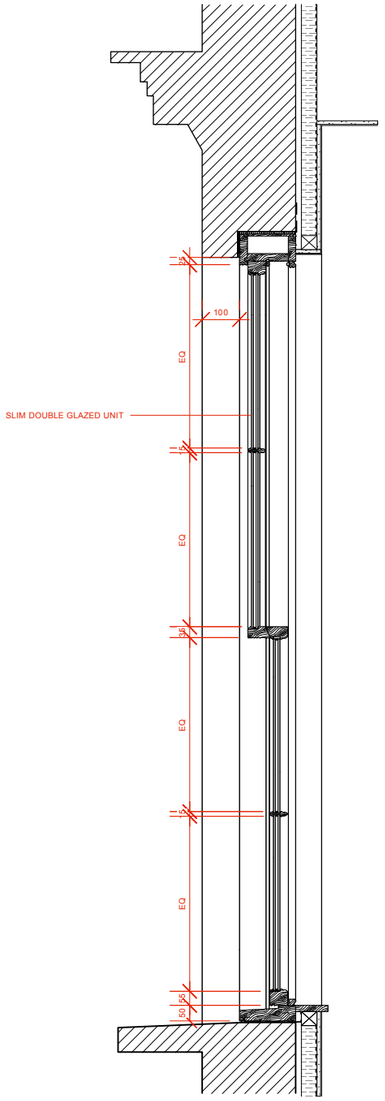

A-A

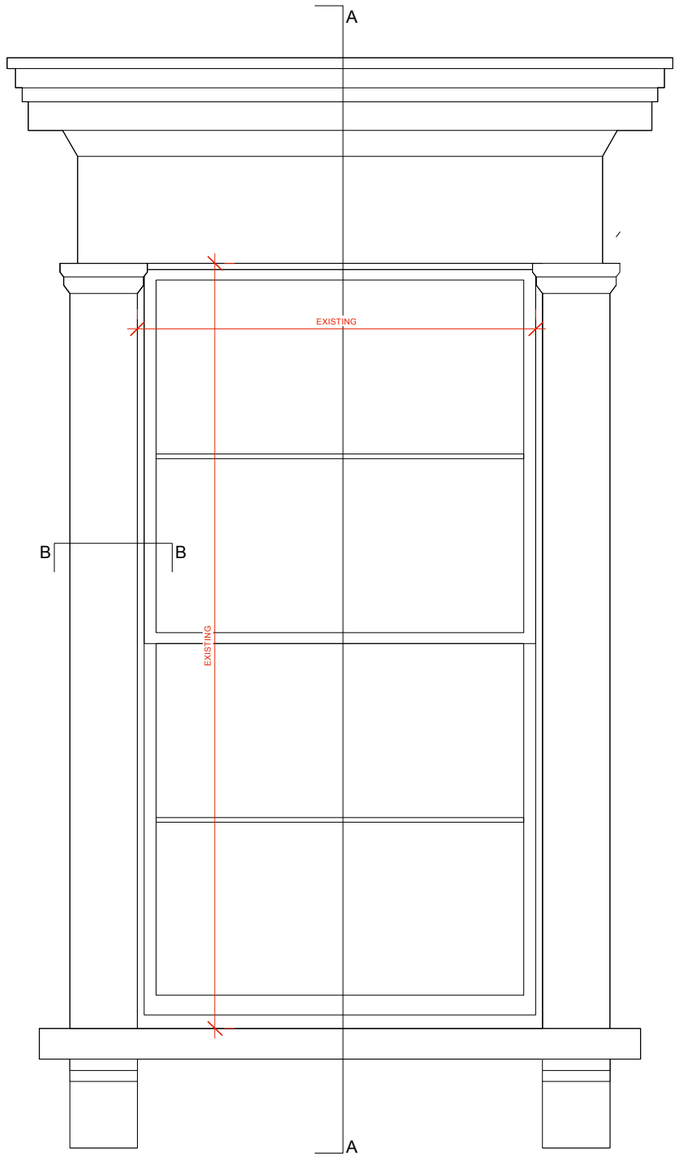

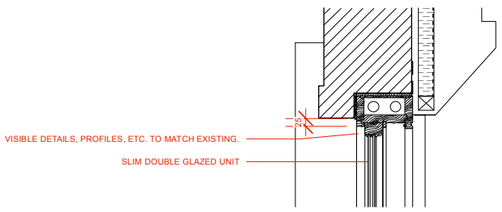

B-B

FRONT WINDOW DETAILED SECTION AND REVEAL @ 1:20

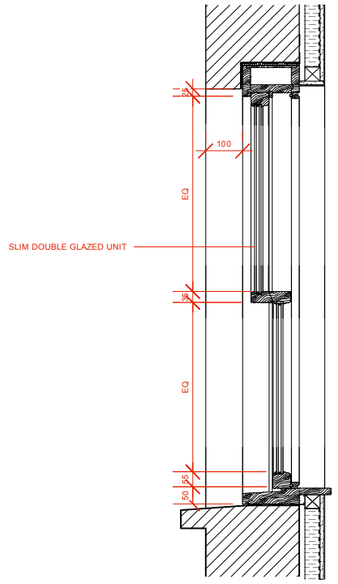

A-A

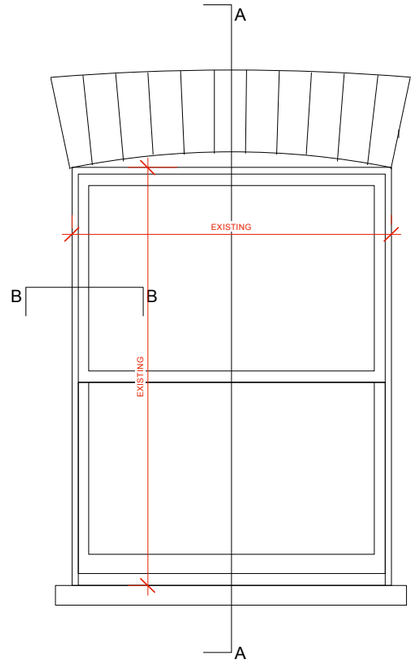

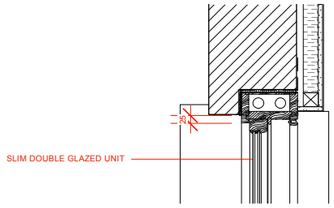

B-B

REAR WINDOW DETAILED SECTION AND REVEAL @ 1:20

0m 1m 2m

1:20

FOR PLANNING

Augment Architecture

Revisions	Project Title	Drawn By	Date	Drawing Number
	41 REGENT'S PARK ROAD	GD	NOVEMBER 2021	**126 PL103 -**
	Drawing Title: **1:20 WINDOW SECTIONS**	Checked By	Scale: 1:100 @ A3	

PLEASE NOTE --- Do not scale, use figured dimensions only. --- All dimensions to be verified on site prior to the commencement of any work or the production of any shop drawing. --- This drawing to be read in conjunction with all related Architect's and Engineer's drawings and any other relevant information. --- No liability will be accepted for any errors or omissions in the content of this drawing, which arise as a result of faulty transmission or reproduction when issued in an electronic format. No alterations or amendments are permitted to this drawing other than by Guy Stansfeld Architects Ltd.

07412 602183 info@augment-architecture.com