Working in partnership

CONSTRUCTION SKILLS CENTRE & SITE ACCOMMODATION AT FORMER MARIA FIDELIS SCHOOL SITE FLOOD RISK ASSESSMENT LLFA OBJECTION RESPONSE NOTE APPENDICES

October 2021

1CP01-MDS_ARP-EV-REP-SS08_SL23-990017 – C01

Revision Key:
P =Preliminary Documents/Drawings – P01, P02, P02
C = Contractual Documents/Drawings – C01, C02, C03
X = As Built Mark-Up Drawings – X01, X02, X03
Z = As Built Record Drawings – Z01, Z02, Z03

Revision	Author	Checked By	Approved By	Date Approved **/**/****	Reason for Revision
C01	GSR			08/10/2021	First Revision
	---	---	---	---	
	---	---	---	---	
	---	---	---	---	
	---	---	---	---	

This document forms the appendices to Construction Skills Centre & Site Accommodation At Former Maria Fidelis School Site Flood Risk Assessment LLFA Objection Response Note (1CP01-MDS_ARP-EV-REP-SS08_SL23-990017) and should be read in conjunction with that Response Note.

APPENDIX 1

LLFA Comments Email

Forsdyke, James

From: Alex Hawtin <Alex.Hawtin@arup.com>
Sent: 03 September 2021 10:21
To: Forsdyke, James; Papaioannou, Angelo
Cc: Andrew Barron; Stuart Hodgetts
Subject: FW: Maria Fidelis - flood risk

Importance: High

Hi James, Angelo,

We have received the below objection from LBC in response to our application.

Are you available this afternoon to discuss the comments and how best to respond?

Thanks,
Alex

From: Patrick Marfleet <Patrick.Marfleet@camden.gov.uk>
Sent: 03 September 2021 09:51
To: Ward, Ryan (MaceDragados) <ryan.ward@macedragados.com>; Alex Hawtin <Alex.Hawtin@arup.com>
Subject: Maria Fidelis - flood risk

CAUTION: This email originated from outside of the organisation. Do not click links or open attachments unless you recognise the sender and know the content is safe.

Hi both, see below comments from our flood risk officer:

This application has not sufficiently demonstrated the use of the London Plan's drainage hierarchy and is proposing the following key items:

- Type of development: Major
- Flood risk: Low, aside from high susceptibility for groundwater (within 2m BGL)
- Types of conveyance / attenuation features: Surface water drainage network, proposed attenuation tank and permeable paving.
- Runoff rate restriction (l/s): 1 l/s through hydrobrake (not clearly stated but modelled), less than greenfield runoff rate.
- Runoff attenuation volume (m3): 198.3
- Maintenance plan: Not provided; Responsibility for maintenance stated to be private company

We require more information and improved proposals before recommending approval of the application for the following reasons:

1. The applicant does not provide full consideration of the drainage hierarchy (London Plan Policy SI13), and does not provide sufficient justification for the lack of green infrastructure incorporated within the proposed drainage strategy.
2. The applicant does not indicate the location of the proposed flow control device on the figure showing the proposed drainage strategy. This is also not clearly stated within the text. We do note however that an online flow control device is modelled in MicroDrainage, as part of the submitted calculations. (Non-Statutory Technical Standards, Policy S2).
3. Given the susceptibility to groundwater levels being elevated on site (reports of groundwater 2m BGL), the applicant is required to consider flotation and risk of groundwater uplift for the proposed features in the drainage strategy.

4. The applicant has not submitted a plan showing the drainage strategy. A snip of a plan has been included in the FRA as Figure 5.1. Figure 5.1 does not indicate the connectivity between the proposed drainage features on site.
5. The applicant has not provided greenfield and existing site runoff volumes. (NTTS, Policy S4 and S5)
6. The applicant has not included the whole site area in the greenfield runoff rates. No calculations have been submitted as evidence of the existing runoff rates.
7. The entire site area has not been included in the proposed drainage network calculations.
8. Maintenance activities for the proposed drainage strategy has not been provided. (Ministerial Statement, 18 December 2014).

To address the above, please can the applicant submit information which:

1. Demonstrates consideration of the London Plan drainage hierarchy, and sufficient justification for the inclusion or lack of green infrastructure as part of the proposed drainage strategy.
2. Indicates the location of the proposed flow control device in a drainage plan, as well as clearly state in the text as to the location and type of flow control proposed in the drainage strategy. This should include details such as key levels, type of flow control mechanism and location within the site.
3. Provides evidence of verification against groundwater uplift and flotation calculation checks for key features within the proposed drainage strategy (attenuation tank, flow control device(s), manholes and pipes etc).
4. Shows the drainage strategy in full, on a standalone plan, with key level information, location of key elements in the drainage strategy and connectivity between proposed drainage features, as well as exceedance flow routes.
5. Indicates the runoff volume for the greenfield and existing site scenario, considering the total site area.
6. Considers the whole site area in greenfield runoff calculations, as well as evidence of consideration of the whole site area in existing site runoff calculations.
7. Demonstrates no flooding on site in the 1 in 30 and 1 in 100 year events factoring in the entire site area in the calculations.
8. Provides maintenance activities for each of the proposed elements in the drainage strategy.

Patrick Marfleet
Senior Planning Officer
Regeneration and Planning
Supporting Communities
London Borough of Camden

Telephone: 020 7974 1222
Web: camden.gov.uk

5 Pancras Square
London N1C 4AG

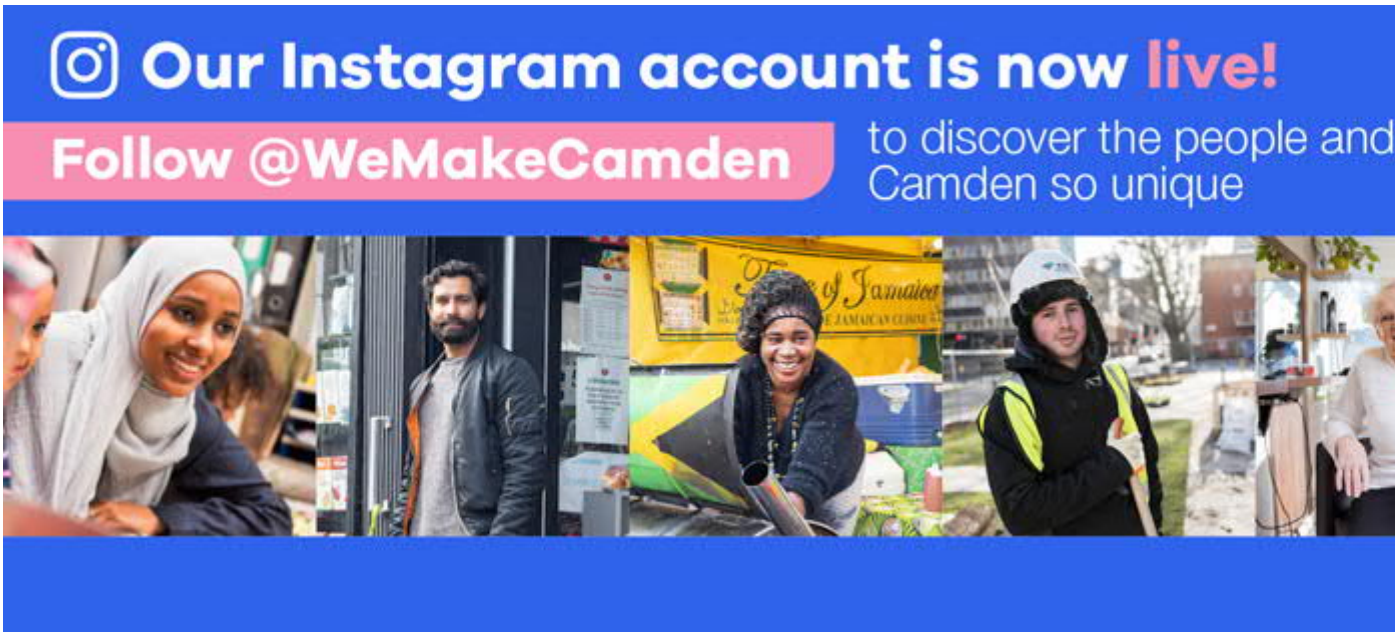

The majority of Council staff are continuing to work at home through remote, secure access to our systems. Where possible please communicate with us by telephone or email.

Please consider the environment before printing this email.

This e-mail may contain information which is confidential, legally privileged and/or copyright protected. This e-mail is intended for the addressee only. If you receive this in error, please contact the sender and delete the material from your computer. See our new Privacy Notice here which tells you how we store and process the data we hold about you and residents.

Electronic mail messages entering and leaving Arup business systems are scanned for viruses and acceptability of content.

APPENDIX 2

Drainage Strategy and Standard Detail Drawings

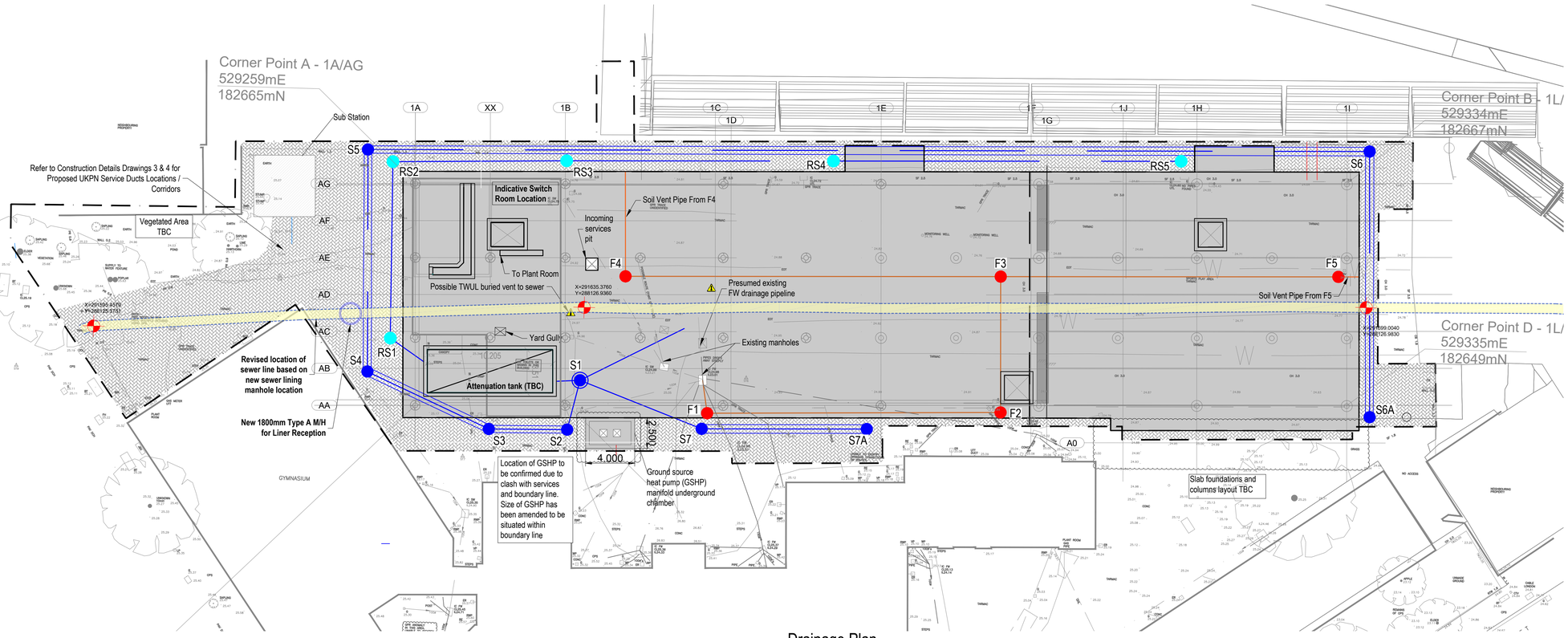

Drainage Plan

SCALE 1:200

NOTES

1. VERIFYING DIMENSIONS. The Contractor shall verify dimensions against such other drawings or site conditions as pertain to this part of the works.
2. EXISTING SERVICES. Any information concerning the location of existing services indicated on this drawing is intended for general guidance only. It shall be the responsibility of the Contractor to determine and verify the exact horizontal and vertical alignment of all cables, pipes, etc (both underground and overhead) before work commences.
3. SPECIFICATION. The General specification for the works shall be the Civil Engineering Specification for the Water Industry (7th Edition)

4. **STANDARD MANHOLE DETAILS**
1) 225mm thick Cl. 20N/20mm mass concrete foundations.
2) Preformed half circle channel pipes. The pipeline may where practicable be laid through the manhole and the crown cut out to half diameter provided flexible joints are situated on each side no further than 600mm from the inner face of the manhole wall.
3) Manhole Construction to be precast manholes chamber walls and cover slab to be constructed to BS EN 1917 and BS 5911-3.
4) Benching and pipe channel pipe surround - Cl. 20N/20mm concrete.
5) Benching finished in 2:1 sand-cement mortar with a smooth trowel finish at 1 in 30 slope towards channel.
6) Standard rungs @ 300mm c/c vertically and galvanised to latest version of BS 729 or equivalent.
7) Step irons are not acceptable.
8) Roof slabs - min.600mm square opening 9)Precast r.c. roof slabs shall be 200mm thick in Cl 30N/20mm concrete with 40mm cover to steel.
10) 1 to 2 courses of solid engineering bricks Class B to BS EN 771-1 set in mortar to BS 5628 class i
11) Class F900 manhole cover and frame to BS EN 124. 150mm deep frame for roads and 100mm deep for footpaths and green areas. Non-rockdesign closed keyways manufactured from spherodial graphite cast iron (ductile cast iron) 600mm*600mm (600mm dia.) clear opening cover and frame coated in bitumen or other approved material cover to have a minimum mass of 140 kg/m2 frame bearing area shall be 80,000mm2 min. frames shall be designed to prevent covers falling into manhole. Frames shall be bedded on approved mortar to manufactures instructions.
12) Short length pipe and pipe joint external to manhole shall not exceed 600mm from the inner face of manhole wall.
13) Toe holes of 230mm min. depth and galvanised steel safety railings to be provided in benching of sewers greater than 525mm dia. and depth to invert > 3.0m for access to invert.
14) A safety chain is to be provided on pipes that exceed 450mm dia. Mild steel safety chain shall be 10mm nominal size grade M(H) non-calibarted chain Type 1 complying with BS 4942 Part 2 or equivalent.
15) When depth of manholes to invert is > 3.0m ladders shall be used instead of rungs to BS 4211 or equivalent except that stringers should be not less than 65mm*12mm in section and rungs 25mm in dia. Fixed ladders should meet the dimensional requirements of BS 4211 or equivalent.
16) Ladder stringers should be adequately supported from the manhole wall at intervals of not more than 2.0m stringers should be bolted to cleats to facilitate renewal.
17) Ladders rungs handrails safety chains etc shall be hot dipped galvanised to BS 729 or equivalent. 18)Pipe should be cut flush with the inside surface of the manhole wall so that the channel extends the full length of the manhole (except for precast manholes). 19)Position of 910 mm opening in intermediate roof slab. -All manholes shall be watertight to the satisfaction of the Engineer. -Formwork to reinforced concrete and mass concrete shall comply with Class 2 Section 6.2.7 BS 8110:Part 1: 1997.Finish to the top of slabs shall comply with Type Section 6.2.7 BS 8110: Part 1 :1997.
20) For manholes >3.0m depth to invert use Cl 30N/20mm in situ concrete. Reinforcing mesh ref. A393 @ 6.16 kg/m to be fixed at mid point of wall. Additional reinforcement to be supplied over pipe crown.
21) For precast manholes chamber walls and cover slab to be constructed to BS EN 1917 and BS 5911-3.
23) For bedding and sealing of chamber rings the top ring(to precast cover slab) and bottom ring to be bedded with cement mortar. For intermediate rings joints to be sealed with approved pre-formed jointing strip.
24) Precast manholes to be surrounded with a minimum of 150mm thick grade Cl 20N/40mm.
25) Gully slot configurations shall be Type R in accordance with the DMRB ref. HA102. Gully covers gratings and frames shall comply with Load Class F900 in accordance with BS EN 1433:2002 for heavy duty imposed loads within the plant working area.
26) Expansion joint sealing compounds and sealants shall be accompanied by a manufacturers certificate of compliance. Expansion joints around drainage infrastructure (gullys, ACO channels and manhole slabs) shall be in accordance with the DMRB Series 1000. Joint seals shall comply with Cl 1017 cold applied Type N conforming to BS 5212-1 with minimum width 20mm and depth 15mm.

5. Drawing not to scale.
6. Vented manhole covers required at all Roof Storm runoff manhole locations (RS1 to RS5) to aid the syphonic drainage requirements
7. Compliance with the Design and Construction Guidance for foul and surface water sewers offered for adoption under the Code for adoption agreements for water and sewerage companies shall be applicable where required.

Key Drainage Design NOTES

Site

Site Area:	2476 m2
Existing Landscape Area	130 m2
Existing Impermeable Area:	2346 m2
Existing Percentage Impermeable:	95 %
Proposed Permeable Area (50% Landscaping):	65 m2
Proposed Percentage Impermeable Area:	97 %

Sub-Catchment - Roof Area

Total Area:	1124 m2
Proposed Impermeable Area:	894 m2
Proposed Impermeable Area (Green Roof):	230 m2
Total proposed Impermeable Area:	1124m2

Sub- Catchment - Hardstanding Area

Total Area:	1057 m2
Proposed Impermeable Area:	1057 m2

Site Storm Discharge

Site Area:	2476 m2

Greenfield Runoff Rates:

1 in 1 year storm event	0.85 l/s
1 in 30 year storm event	2.29 l/s
1 in 100 year storm event	3.18 l/s
Qbar (Urban)	1.00 l/s
Allowable Discharge Rate	1.00 l/s

Site Foul Discharge

Existing Peak Foul Discharge	0.00 l/s
Proposed Peak Foul Discharge	9.13 l/s

Site

Existing Peak Combined Discharge Rate (1 in100)	3.18 l/s
Proposed Peak Combined Discharge Rate (1 in 100)	10.31 l/s
Proposed Peak Combined Discharge Rate (1 in 100 + 30%)	13.40 l/s

Attenuation Requirements

Porous Pavement

Area:	723 m2
Voids:	30 % (Type 3 Aggregate)
Depth:	0.55-0.60 mm
Storage Volume:	119.40 - 143.10m3

Geocellular Storage

Area:	35 m2
Voids:	95 % (Proprietary Geo-cell)
Depth:	1.60 mm
Storage Volume:	53.20 m3

Total Storage Provided: 172.60 - 196.3m3
Additional Storage provided within pipe network (Approx 18m3)

Top Water Level during 100yr + 40% CC= Max 24.900m AOD

DRAINAGE DESIGN SUBJECT TO AGREEMENT WITH LONDON BOROUGH OF CAMDEN (LLFA)

Pile setting out coordinates are derived from 'snake grid' coordinate system as defined in the 2d CAD drawing: '1164-SK-044 - Rev2 - Site Plan Eastings Northings' Where the distance between GL 1A and GL 1I is 75.815m (as per architects drawing it should be 75.800m)

FOUL WATER DRAINAGE NETWORK (150mm Ø Pipes)

	Manhole / Type	Cover Level	Invert Level	Depth	Length	Gradient (%)	Gradient (1 in …)	Easting	Northing
ROUTE 1	F4 (Type C)	25.08	24.650	0.430				291638.734	288129.465
					23.80	0.010	100		
	F3 (Type C)	25.08	24.412	0.668				291669.264	288129.474
	F3 (Type C)	25.08	24.412	0.668				291669.264	288129.474
					13.40	0.010	100		
	F2 (Type C)	25.00	23.86	1.139				291669.261	288118.424
	F2 (Type C)	25.00	23.861	1.139				291669.261	288118.424
					30.50	0.010	100		
	F1 (Type C)	25.00	23.556	1.444				291645.387	288118.337
	F1 (Type C)	25.00	23.556	1.444				291645.387	288118.337
					6.00	0.013	80		
	Ext Foul M/H	25.08	23.481	1.599				291645.021	288121.021
ROUTE 2	F5 (Type C)	24.60	24.270	0.330				291696.736	288129.483
					27.50	0.010	100		
	F3 (Type C)	25.08	23.995	1.085				291669.264	288129.474

ROOF DRAINAGE NETWORK (300mm Ø Perforated Pipes)

	Manhole / Type	Cover Level	Invert Level	Depth	Length	Gradient (%)	Gradient (1 in …)	Easting	Northing
ROUTE 1	RS5 (Type B)	25.00	24.550	0.450				291683.931	288138.870
					25.80	0.0067	150		
	RS4 (Type B)	25.00	24.378	0.622				291655.639	288138.861
	RS4 (Type B)	25.00	24.378	0.622				291655.639	288138.861
					25.80	0.0067	150		
	RS3 (Type B)	25.00	24.206	0.794				291633.933	288138.855
	RS3 (Type B)	25.00	24.206	0.794				291633.933	288138.855
					14.40	0.0067	150		
	RS2 (Type B)	25.10	24.110	0.990				291619.800	288138.768
	RS2 (Type B)	25.10	24.110	0.990				291619.800	288138.768
					14.50	0.0067	150		
	RS1 (Type A)	25.00	24.013	0.987				291619.605	288124.416
	RS1 (Type A)	25.00	24.013	0.987				291619.605	288124.416
					3.50	0.0067	150		
	AT Inlet No.1	25.00	23.590	1.410				291622.328	288122.498

STORM WATER DRAINAGE NETWORK (300mm Ø Perforated Pipes)

	Manhole / Type	Cover Level	Invert Level	Depth	Length	Gradient (%)	Gradient (1 in …)	Easting	Northing
ROUTE 1	S6A (Type B)	25.00	24.294	0.706				291699.294	288118.076
					21.60	0.0067	150		
	S6 (Type B)	25.00	24.150					291699.268	288139.683
	S6 (Type B)	25.00	24.150	0.850				291699.268	288139.683
					84.00	0.0067	150		
	S5 (Type B)	25.00	23.590	1.410				291617.768	288139.756
	S5 (Type B)	25.00	23.590	1.410				291617.768	288139.756
					14.60	0.0067	150		
	S4 (Type B)	25.00	23.493	1.507				291617.743	288121.701
	S4 (Type B)	25.00	23.493	1.507				291617.743	288121.701
					14.10	0.0067	150		
	S3 (Type B)	25.00	23.399	1.601				291627.623	288117.036
	S3 (Type B)	25.00	23.399	1.601				291627.623	288117.036
					7.40	0.0067	150		
	S2 (Type A)	25.00	23.349	1.651				291634.001	288116.989
	S2 (Type A)	25.00	23.349	1.651				291634.001	288116.989
					5.90	0.0067	150		
	S1 (Type E)	25.00	22.890	2.11				291635.042	288121.001
ROUTE 2	S7A (Type B)	25.00	23.618	1.382				291658.378	288117.062
					13.50	0.0067	150		
	S7 (Type A)	25.00	23.528	1.472				291644.942	288117.066
	S7 (Type A)	25.00	23.528	1.472				291644.942	288117.066
					11.00	0.0067	150		
	S1(Type E)	25.00	23.528	1.472				291635.042	288121.001

Rev	Description	Drawn	Checked	Approved	Con App
P03	Updated Site Boundary Line	07-10-21 WY	07-10-21 KRJ	07-10-21 KHR	
P02	Second Issue - FRA Guidance	22-09-21 KRJ	22-09-21 KRJ	22-09-21 KHR	
P01	First Issue	02-09-21 WY	02-09-21 KRJ	02-09-21 KHR	

HS2 accepts no responsibility for any circumstances which arise from the reproduction of this document after alteration, amendment or abbreviation or if it is issued in part or issued incompletely in any way.

© Crown Copyright and database right 2020. All rights reserved. Ordnance Survey Licence number 100049190

© Crown Copyright material is reproduced with the permission of Land Registry under delegated authority from the Controller of HMSO.

This material was last updated on 2020 and may not be copied, distributed, sold or published without the formal permission of Land Registry. Only an official copy of a title plan or register obtained from the Land Registry may be used for legal or other official purposes.

Scale with caution as distortion can occur.

Legends/Notes:

- RS1 — Roof Water Chamber
- Roof Water Pipe
- F1 — Foul Water Chamber
- Foul Water Pipe
- S2 — Storm Water Chamber
- S1 — Storm Water Chamber with Hydrobrake Flow Control
- Storm Water Pipe
- UKPN Duct Corridor
- Permeable Paving
- Concrete Slab
- Site Boundary

See Details Sheets for Chamber Types

HS2

OFFICIAL

Registered in England
Registration No. 06791686
Registered office:
2 Snow Hill, Queensway,
Birmingham, B4 6GA

Project/Contract: 1CP01		Creator/Originator: MDS	Sub-Originator: WWH
Zone: SS08	Work Package Description: Maria Fidelis Accomodation	Discipline/Function: DS	System Description: DGA
Drawing Title: Maria Fidelis Welfare Foundation Drainage Plan Sheet 1 of 5		Drawn by: WY / Checked by: KR	Approved by: IV / Date: 02/09/2021
		Scale: 1:200 / Size: A1	Stage: / Suitability: S3
		Drawing No.: 1CP01-MDS_WWH-DR-DGA-SS08_SL23_GF-000001	Rev.: P03

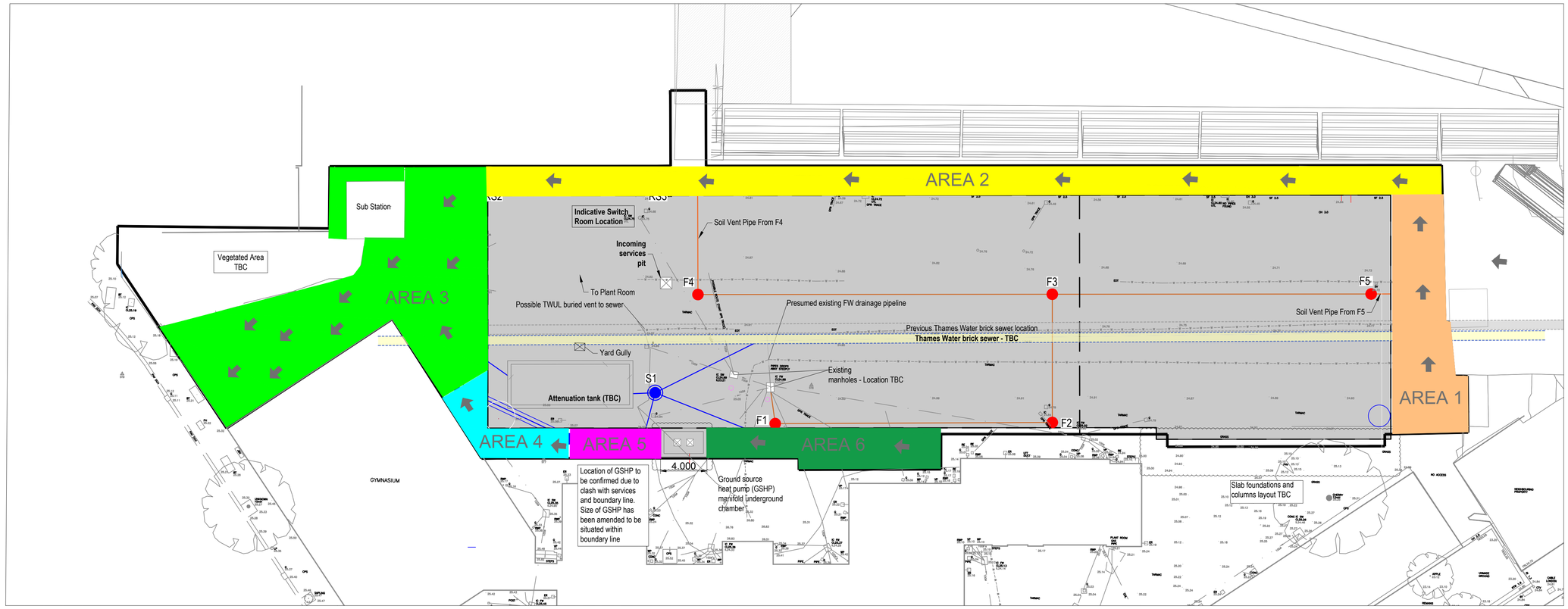

Drainage Plan

SCALE 1:200

NOTES

1. VERIFYING DIMENSIONS. The Contractor shall verify dimensions against such other drawings or site conditions as pertain to this part of the works.
2. EXISTING SERVICES. Any information concerning the location of existing services indicated on this drawing is intended for general guidance only. It shall be the responsibility of the Contractor to determine and verify the exact horizontal and vertical alignment of all cables, pipes, etc (both underground and overhead) before work commences.
3. SPECIFICATION. The General specification for the works shall be the Civil Engineering Specification for the Water Industry (7th Edition)
4. STANDARD MANHOLE DETAILS 1)225mm thick Cl. 20N/20mm mass concrete foundations. 2)Preformed half circle channel pipes. The pipeline may where practicable be laid through the manhole and the crown cut out to half diameter provided flexible joints are situated on each side no further than 600mm from the inner face of the manhole wall. 3)Manhole Construction to be precast manholes chamber walls and cover slab to be constructed to BS EN 1917 and BS 5911-3. 4)Benching and pipe channel pipe surround - Cl. 20N/20mm concrete. 5)Benching finished in 2:1 sand-cement mortar with a smooth trowel finish at 1 in 30 slope towards channel. 6)Standard rungs @ 300mm c/c vertically and galvanised to latest version of BS 729 or equivalent. 7)Step irons are not acceptable.

8) Roof slabs - min.600mm square opening 9)Precast r.c. roof slabs shall be 200mm thick in Cl 30N/20mm concrete with 40mm cover to steel.

10) 1 to 2 courses of solid engineering bricks Class B to BS EN 771-1 set in mortar to BS 5628 class i

11) Class F900 manhole cover and frame to BS EN 124. 150mm deep frame for roads and 100mm deep for footpaths and green areas. Non-rockdesign closed keyways manufactured from spheroidal graphite cast iron (ductile cast iron) 600mm*600mm (600mm dia.) clear opening cover and frame coated in bitumen or other approved material cover to have a minimum mass of 140 kg/m2 frame bearing area shall be 80,000mm2 min. frames shall be designed to prevent covers falling into manhole. Frames shall be bedded on approved mortar to manufactures instructions.

12) Short length pipe and pipe joint external to manhole shall not exceed 600mm from the inner face of manhole wall.

13) Toe holes of 230mm min. depth and galvanised steel safety railings to be provided in benching of sewers greater than 525mm dia. and depth to invert > 3.0m for access to invert.

14) A safety chain is to be provided on pipes that exceed 450mm dia. Mild steel safety chain shall be 10mm nominal size grade M(H) non-calibarted chain Type 1 complying with BS 4942 Part 2 or equivalent.

15) When depth of manholes to invert is > 3.0m ladders shall be used instead of rungs to BS 4211 or equivalent except that stringers should be not less than 65mm*12mm in section and rungs 25mm in dia. Fixed ladders should meet the dimensional requirements of BS 4211 or equivalent.

16) Ladder stringers should be adequately supported from the manhole wall at intervals of not more than 2.0m stringers should be bolted to cleats to facilitate renewal.

17) Ladders rungs handrails safety chains etc shall be hot dipped galvanised to BS 729 or equivalent. 18)Pipe should be cut flush with the inside surface of the manhole wall so that the channel extends the full length of the manhole (except for precast manholes). 19)Position of 910 mm opening in intermediate roof slab. -All manholes shall be watertight to the satisfaction of the Engineer. -Formwork to reinforced concrete and mass concrete shall comply with Class 2 Section 6.2.7 BS 8110:Part 1: 1997.Finish to the top of slabs shall comply with Type Section 6.2.7 BS 8110: Part 1 :1997.

20) For manholes >3.0m depth to invert use Cl 30N/20mm in situ concrete. Reinforcing mesh ref. A393 @ 6.16 kg/m to be fixed at mid point of wall. Additional reinforcement to be supplied over pipe crown.

21) For precast manholes chamber walls and cover slab to be constructed to BS EN 1917 and BS 5911-3.

23) For bedding and sealing of chamber rings the top ring(to precast cover slab) and bottom ring to be bedded with cement mortar . For intermediate rings joints to be sealed with approved pre-formed jointing strip.

24) Precast manholes to be surrounded with a minimum of 150mm thick grade CI 20N/40mm.

25) Gully slot configurations shall be Type R in accordance with the DMRB ref. HA102. Gully covers gratings and frames shall comply with Load Class F900 in accordance with BS EN 1433:2002 for heavy duty imposed loads within the plant working area.

26) Expansion joint sealing compounds and sealants shall be accompanied by a manufacturers certificate of compliance. Expansion joints around drainage infrastructure (gullys, ACO channels and manhole slabs) shall be in accordance with the DMRB Series 1000. Joint seals shall comply with CI 1017 cold applied Type N conforming to BS 5212-1 with minimum width 20mm and depth 15mm.

27) Drawing not to scale.

28) Vented manhole covers required at all Roof Storm runoff manhole locations (RS1 to RS5) to aid the syphonic drainage requirements

29) Compliance with the Design and Construction Guidance for foul and surface water sewers offered for adoption under the Code for adoption agreements for water and sewerage companies shall be applicable where required.

LEGEND

RS1	Roof Water Chamber
	Roof Water Pipe
F1	Foul Water Chamber
	Foul Water Pipe
S2	Storm Water Chamber
S1	Storm Water Chamber with Hydrobrake Flow Control
	Storm Water Pipe
	UKPN Duct Corridor
	Permeable Paving
	Concrete Slab
	Site Boundary
	Building Footprint
	Exceedance Flow Route

See Details Sheets for Chamber Types

Snake grid setting out coordinates are derived from converted OS points given on drawing: 1CP01-MDS_PML-AR-DGA-SS08_SL23-000002 - MODULAR BUILDING CO-ORDINATES Rev C04

Thames Water Sewer Location to be confirmed. New sewer location shown on drawing has been taken from the coordinates provided for the manhole lining works.

Rev	Description	Drawn	Checked	Approved	Con App
P01	First Issue	21-09-21 KHR	21-09-21 KRJ	21-09-21 KHR	

HS2 accepts no responsibility for any circumstances which arise from the reproduction of this document after alteration, amendment or abbreviation or if it is issued in part or issued incompletely in any way.

© Crown Copyright and database right 2020. All rights reserved. Ordnance Survey Licence number 100049190

© Crown Copyright material is reproduced with the permission of Land Registry under delegated authority from the Controller of HMSO.

This material was last updated on 2020 and may not be copied, distributed, sold or published without the formal permission of Land Registry. Only an official copy of a title plan or register obtained from the Land Registry may be used for legal or other official purposes.

Scale with caution as distortion can occur.

Legends/Notes:

PRELIMINARY DRAWING

HS2

OFFICIAL

Registered in England
Registration No. 06791686
Registered office:
2 Snow Hill, Queensway,
Birmingham, B4 6GA

Project/Contract: 1CP01		Creator/Originator: MDS	Sub-Originator: WWH
Zone: SS08	Work Package Description: Maria Fidelis Accomodation	Discipline/Function: DS	System Description: DGA
Drawing Title: Maria Fidelis Welfare Foundation Drainage Plan Exceedance Flows		Drawn by: WY / Checked by: KR	Approved by: IV / Date: 22/09/2021
		Scale: 1:200 / Size: A1	Stage: / Suitability: S3
		Drawing No.: TBC	Rev.: P01

Dimension 'D'		
Shaft Chamber Size.	Manhole <1.5m Depth.	Manhole >1.5m Depth.
1200mm	750 x 600 eccentric	675 x 675 eccentric
1350 - 1500mm	1200 x 675 central	675 x 675 eccentric
1800 - 3000mm	1200 x 675 eccentric	675 x 675 eccentric
Covers, Gratings & Frames to be heavy duty iron cover to BS EN124 ref. F900. Fitted with Standard Locking Bolts (S9, grating).		

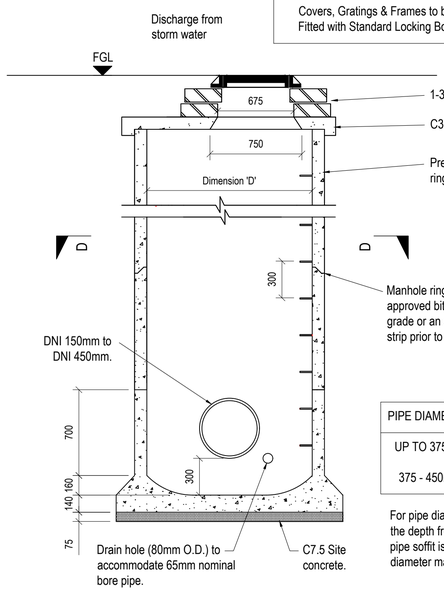

Section C - C.

TYPE 'A' CATCHPIT MANHOLE
PRECAST CONCRETE CIRCULAR MANHOLE.

Less than 4.5m deep - Type 'M'

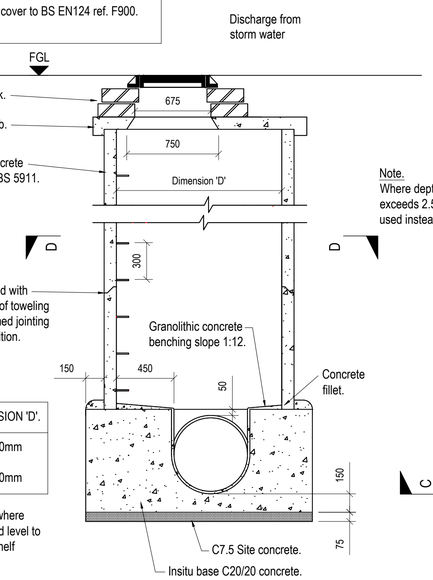

PIPE DIAMETER.	DIMENSION 'D'.
UP TO 375mm	1200mm
375 - 450mm	1350mm

For pipe diameters <375mm where the depth from finished ground level to pipe soffit is <1.5m, internal shelf diameter may be 1050mm.

Section C - C.

TYPE 'B' MANHOLE
PRECAST CONCRETE CIRCULAR MANHOLE.

Less than 4.5m deep - Type 'M'

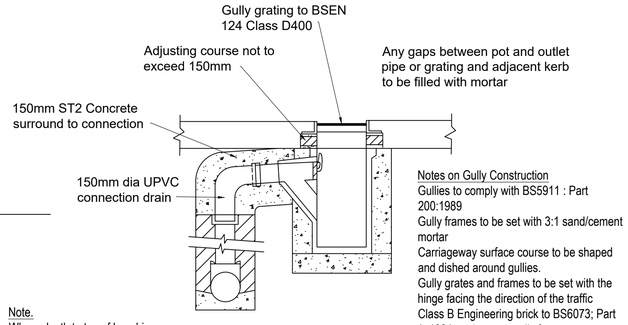

Note.
Where depth to top of benching exceeds 2.5m a ladder shall be used instead of step irons.

Notes on Gully Construction
Gullies to comply with BS5911 : Part 200:1989
Gully frames to be set with 3:1 sand/cement mortar
Carriageway surface course to be shaped and dished around gullies.
Gully grates and frames to be set with the hinge facing the direction of the traffic
Class B Engineering brick to BS6073; Part 1: 1981, make up to gully frame.
UPVC pipes to BS4660: 1989 or BS5481: 1977(1989)
Concrete pipes to BS591 1:Part 100: 1988

Precast Concrete Trapped Gullies

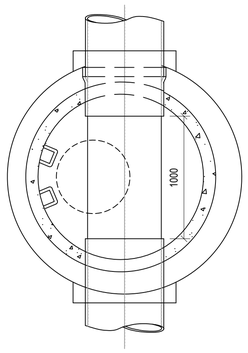

Section D - D.

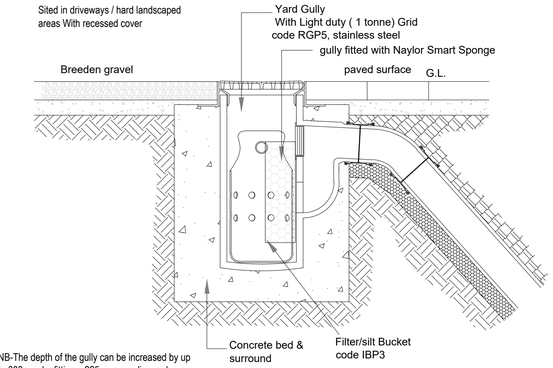

NB-The depth of the gully can be increased by up to 300 mm by fitting a 225 mm coupling code SC1/5 and a 300 mm high raising piece code SP030/5 between the frame and the gully body.

Yard gully Connection Detail

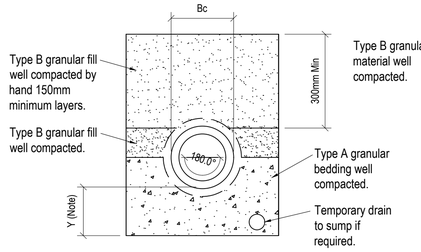

Class 'B' Bedding Detail.

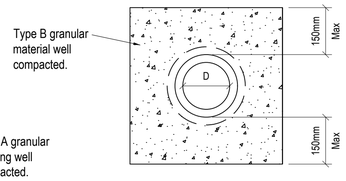

Class 'E' Bedding Detail.

BEDDING AND SURROUND DETAILS.

Notes.
1. Bc = Outside Diameter.
2. D = Diameter.
3. In rock or mixed soils containing rock bands, boulders, large flints or stones or other irregular hard spots, the depth of bed shall be Y = $\frac{1}{4}$ Bc or 150mm whichever is the greater, under the barrels but not less than 150mm under the sockets also. In uniform soils, the depth of bed shall be Y = $\frac{1}{6}$ Bc or 100mm whichever is the greater under the barrels bur not less than 50mm under the sockets.

NOTES

1. VERIFYING DIMENSIONS. The Contractor shall verify dimensions against such other drawings or site conditions as pertain to this part of the works.
2. EXISTING SERVICES. Any information concerning the location of existing services indicated on this drawing is intended for general guidance only. It shall be the responsibility of the Contractor to determine and verify the exact horizontal and vertical alignment of all cables, pipes, etc (both underground and overhead) before work commences.
3. SPECIFICATION. The General specification for the works shall be the Civil Engineering Specification for the Water Industry (7th Edition)
4. STANDARD MANHOLE DETAILS 1)225mm thick Cl. 20N/20mm mass concrete foundations. 2)Preformed half circle channel pipes. The pipeline may where practicable be laid through the manhole and the crown cut out to half diameter provided flexible joints are situated on each side no further than 600mm from the inner face of the manhole wall. 3)Manhole Construction to be precast manholes chamber walls and cover slab to be constructed to BS EN 1917 and BS 5911-3. 4)Benching and pipe channel pipe surround - Cl. 20N/20mm concrete. 5)Benching finished in 2:1 sand:cement mortar with a smooth trowel finish at 1 in 30 slope towards channel. 6)Standard rungs @ 300mm c/c vertically and galvanised to latest version of BS 729 or equivalent. 7)Step irons are not acceptable.
8) Roof slabs - min.600mm square opening 9)Precast r.c. roof slabs shall be 200mm thick in Cl 30N/20mm concrete with 40mm cover to steel.
10) 1 to 2 courses of solid engineering bricks Class B to BS EN 771-1 set in mortar to BS 5628 class i
11) Class F900 manhole cover and frame to BS EN 124. 150mm deep frame for roads and 100mm deep for footpaths and green areas. Non-rockdesign closed keyways manufactured from spheroidal graphite cast iron (ductile cast iron) 600mm*600mm (600mm dia.) clear opening cover and frame coated in bitumen or other approved material cover to have a minimum mass of 140 kg/m2 frame bearing area shall be 80,000mm2 min. frames shall be designed to prevent covers falling into manhole. Frames shall be bedded on approved mortar to manufactures instructions.
12) Short length pipe and pipe joint external to manhole shall not exceed 600mm from the inner face of manhole wall.
13) Toe holes of 230mm min. depth and galvanised steel safety railings to be provided in benching of sewers greater than 525mm dia. and depth to invert > 3.0m for access to invert.
14) A safety chain is to be provided on pipes that exceed 450mm dia. Mild steel safety chain shall be 10mm nominal size grade M(H) non-calibarted chain Type 1 complying with BS 4942 Part 2 or equivalent.
15) When depth of manholes to invert is > 3.0m ladders shall be used instead of rungs to BS 4211 or equivalent except that stringers should be not less than 65mm*12mm in section and rungs 25mm in dia. Fixed ladders should meet the dimensional requirements of BS 4211 or equivalent.
16) Ladder stringers should be adequately supported from the manhole wall at intervals of not more than 2.0m stringers should be bolted to cleats to facilitate renewal.
17) Ladders rungs handrails safety chains etc shall be hot dipped galvanised to BS 729 or equivalent. 18)Pipe should be cut flush with the inside surface of the manhole wall so that the channel extends the full length of the manhole (except for precast manholes). 19)Position of 910 mm opening in intermediate roof slab. -All manholes shall be watertight to the satisfaction of the Engineer. -Formwork to reinforced concrete and mass concrete shall comply with Class 2 Section 6.2.7 BS 8110:Part 1: 1997 Finish to the top of slabs shall comply with Type Section 6.2.7 BS 8110: Part 1 :1997.
20) For manholes >3.0m depth to invert use Cl 30N/20mm in situ concrete. Reinforcing mesh ref. A393 @ 5.16 kg/m to be fixed at mid point of wall. Additional reinforcement to be supplied over pipe crown.
21) For precast manholes chamber walls and cover slab to be constructed to BS EN 1917 and BS 5911-3.
23) For bedding and sealing of chamber rings the top ring(to precast cover slab) and bottom ring to be bedded with cement mortar . For intermediate rings joints to be sealed with approved pre-formed jointing strip.
24) Precast manholes to be surrounded with a minimum of 150mm thick grade Cl 20N/40mm.
25) Gully slot configurations shall be Type R in accordance with the DMRB ref. HA102. Gully covers gratings and frames shall comply with Load Class F900 in accordance with BS EN 1433:2002 for heavy duty imposed loads within the plant working area.
26) Expansion joint sealing compounds and sealants shall be accompanied by a manufacturers certificate of compliance. Expansion joints around drainage infrastructure (gullys, ACO channels and manhole slabs) shall be in accordance with the DMRB Series 1000. Joint seals shall comply with Cl 1017 cold applied Type N conforming to BS 5212-1 with minimum width 20mm and depth 15mm.
27) Drawing not to scale.
28) Vented manhole covers required at all Roof Storm runoff manhole locations (RS1 to RS5) to aid the syphonic drainage requirements
29) Compliance with the Design and Construction Guidance for foul and surface water sewers offered for adoption under the Code for adoption agreements for water and sewerage companies shall be applicable where required.

Channel Material.	Joint Type.	Bedding Class.
Polyester concrete channels; Class F900 loading in accordance with BS EN 1433; sizes 150mm, 200mm and 300mm nominal internal width Wc.	As per manufacture requirements.	Concrete.

Type A Granular Fill Grading.

Sieve size mm.	Grading range %.
63	100
31.5	80 - 99
16	55 - 85
8	35 - 68
4	22 - 60
2	16 - 47
1	9 - 40
0.5	5 - 35
0.063	0 - 7

Type B Granular Fill Grading.

Sieve size mm.	Grading range %.
63	100
31.5	80 - 99
16	55 - 95
8	35 - 68
4	22 - 50
2	15 - 40
1	10 - 35
0.5	0 - 20
0.063	0 - 7

Type C Granular Fill Grading.

Sieve size mm.	Grading range %.
80	100
40	80 - 99
20	55 - 85
10	35 - 65
4	22 - 50
2	15 - 40
1	10 - 35
0.5	0 - 20
0.063	0 - 7

Pipe Material.	Joint Type.	Bedding Class.
Concrete pipes IS EN 1916 and IS 6:2004 or equivalent Standard pipes for diameter not exceeding 300mm; Class M or Class H pipe for diameter greater than 300mm.	Flexible Spigot and socket joints as described in IS EN 1916 and IS 6:2004.	B.
Clayware to IS EN 295 Parts 1/2/3 or equivalent; Class 160 or 200.	As described in IS EN 295 Parts 1/2/3 or equivalent.	B.
uPVC pipes to EN 1401 or equivalent.	As described in EN 1401 or equivalent.	E.
Perforated socketed pipes to BS 4962:1989	As described in BS 4962:1989 or equivalent.	E.

Pipe Materials & Bedding Details.

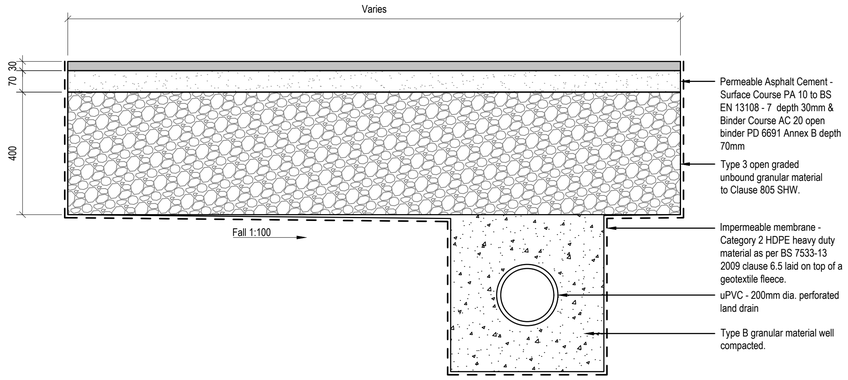

Permeable Pavement Detail

Scale 1:10

Rev	Description	Drawn	Checked	Approved	Con App
P01	First Issue	02-09-21 WY	02-09-21 KRJ	02-09-21 KHR	

Scale with caution as distortion can occur.

HS2 accepts no responsibility for any circumstances which arise from the reproduction of this document after alteration, amendment or abbreviation or if it is issued in part or issued incompletely in any way.

© Crown Copyright and database right 2020. All rights reserved. Ordnance Survey Licence number 100049190

© Crown Copyright material is reproduced with the permission of Land Registry under delegated authority from the Controller of HMSO.

This material was last updated on 2020 and may not be copied, distributed, sold or published without the formal permission of Land Registry. Only an official copy of a title plan or register obtained from the Land Registry may be used for legal or other official purposes.

Legends/Notes:

HS2

OFFICIAL

Registered in England
Registration No. 06791686
Registered office:
2 Snow Hill, Queensway,
Birmingham, B4 6GA

Project/Contract		Creator/Originator	Sub-Originator
1CP01		MDS	WWH
Zone: SS08	Work Package Description: Maria Fidelis Accomodation	Discipline/Function: DS	System Description: DGA

Drawing Title: Maria Fidelis Welfare Foundation
Drainage Plan
Sheet 2 of 5

Drawn by	Checked by	Approved by	Date
WY	KR	IV	02/09/2021

Scale	Size	Stage	Suitability
1:200	A1		S3

Drawing No. 1CP01-MDS_WWH-DS-DGA-SS08_SL23_GF-000002
Rev. P01

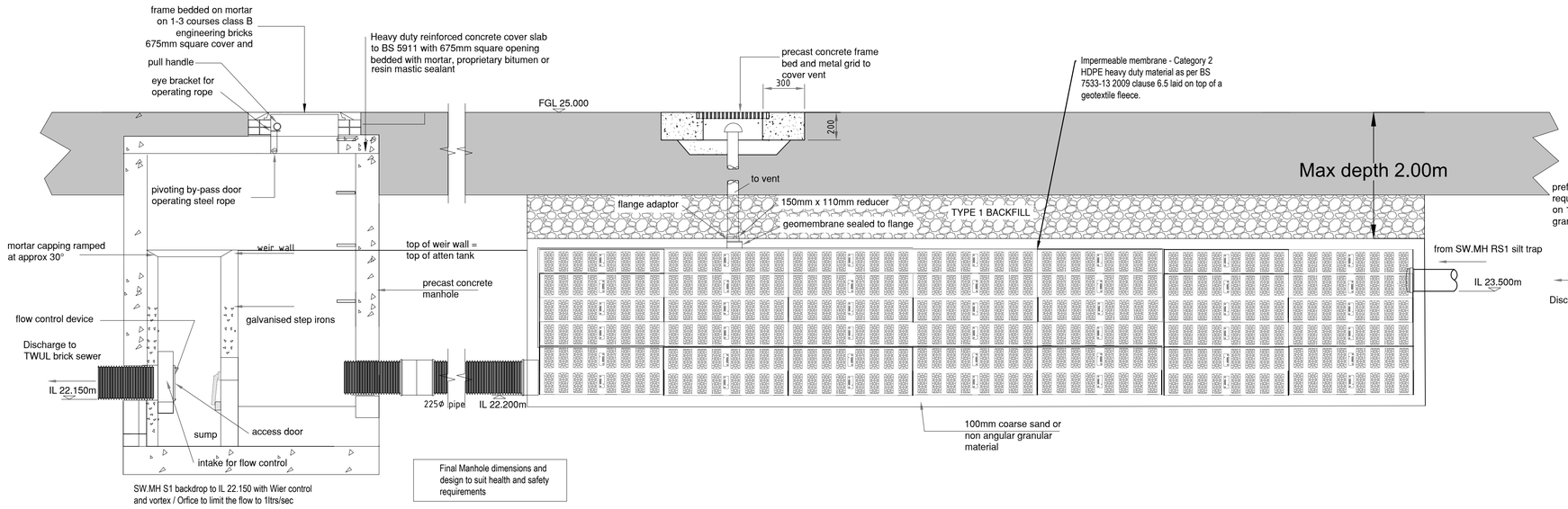

Flow Control Chamber (Type E)

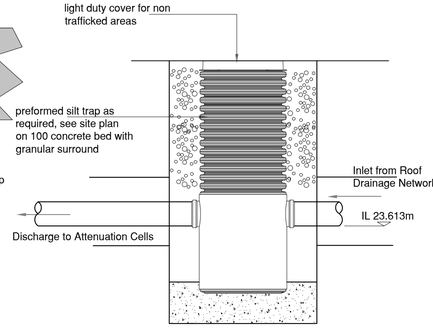

Silt trap SW.MH RS1 prior to entering attenuation tank

Attenuation Tank (6.0m x 6.0m x 1.6m deep)
TYPICAL CONSTRUCTION DETAILS

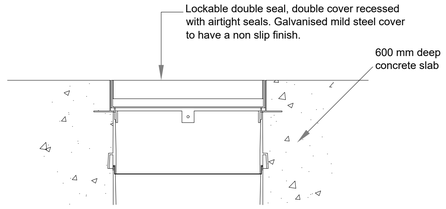

Sited internally

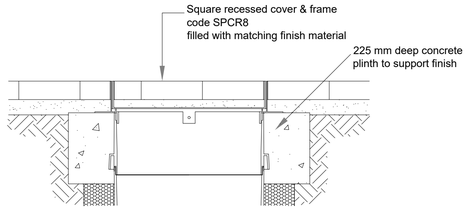

Sited in driveways / hard landscaped areas
With standard round cover
grade B125

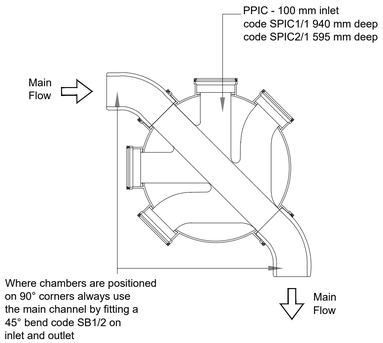

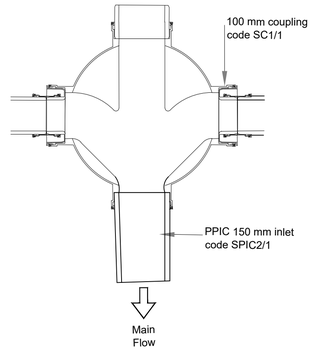

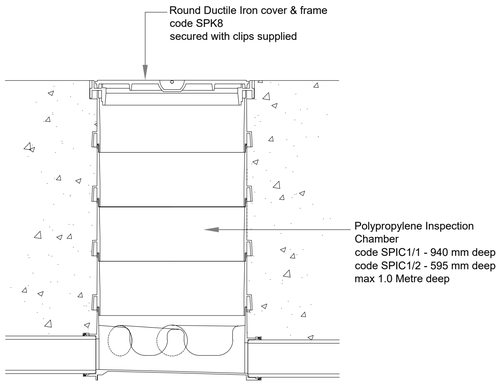

NB - Universal Product - Adaptor to pvc-u pipe included

Polypropylene Inspection Chamber Installation Detail (Type C)

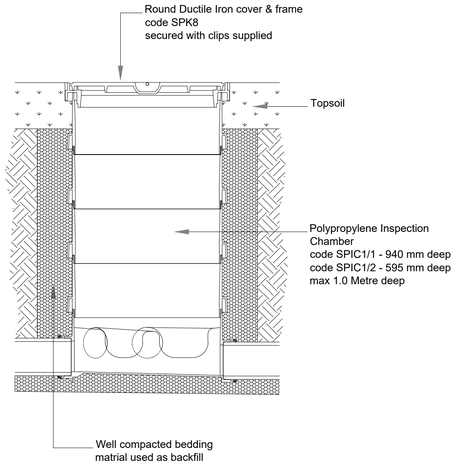

Polypropylene Inspection Chamber Installation Detail (Type D)

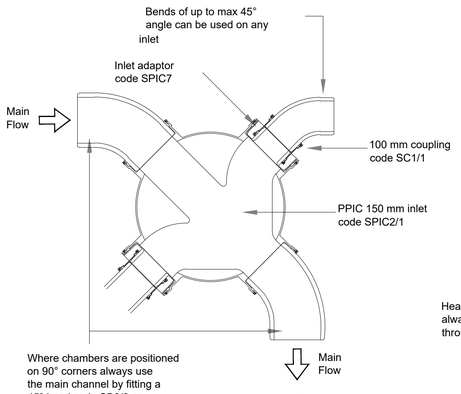

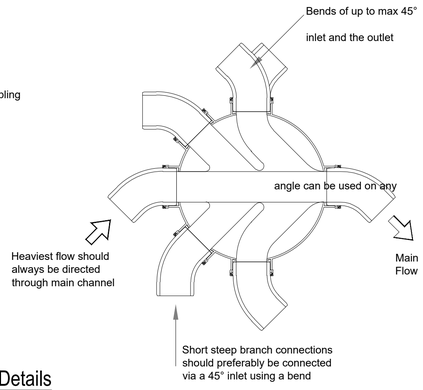

Foul Manhole Chamber Layout Details

DO NOT SCALE THIS DRAWING
PRINT PLOT OR DISK

NOTES

1. VERIFYING DIMENSIONS. The Contractor shall verify dimensions against such other drawings or site conditions as pertain to this part of the works.
2. EXISTING SERVICES. Any information concerning the location of existing services indicated on this drawing is intended for general guidance only. It shall be the responsibility of the Contractor to determine and verify the exact horizontal and vertical alignment of all cables, pipes, etc (both underground and overhead) before work commences.
3. SPECIFICATION. The General specification for the works shall be the Civil Engineering Specification for the Water Industry (7th Edition)
4. STANDARD MANHOLE DETAILS 1)225mm thick Cl. 20N/20mm mass concrete foundations. 2)Preformed half circle channel pipes. The pipeline may where practicable be laid through the manhole and the crown cut out to half diameter provided flexible joints are situated on each side no further than 600mm from the inner face of the manhole wall. 3)Manhole Construction to be precast manholes chamber walls and cover slab to be constructed to BS EN 1917 and BS 5911-3. 4)Benching and pipe channel pipe surround - Cl. 20N/20mm concrete. 5)Benching finished in 2:1 sand-cement mortar with a smooth trowel finish at 1 in 30 slope towards channel. 6)Standard rungs @ 300mm c/c vertically and galvanised to latest version of BS 729 or equivalent. 7)Step irons are not acceptable.
8) Roof slabs - min.600mm square opening 9)Precast r.c. roof slabs shall be 200mm thick in Cl 30N/20mm concrete with 40mm cover to steel.
10) 1 to 2 courses of solid engineering bricks Class B to BS EN 771-1 set in mortar to BS 5628 class i
11) Class F900 manhole cover and frame to BS EN 124. 150mm deep frame for roads and 100mm deep for footpaths and green areas. Non-rockdesign closed keyways manufactured from spheroidal graphite cast iron (ductile cast iron) 600mm*600mm (600mm dia.) clear opening cover and frame coated in bitumen or other approved material cover to have a minimum mass of 140 kg/m2 frame bearing area shall be 80,000mm2 min. frames shall be designed to prevent covers falling into manhole. Frames shall be bedded on approved mortar to manufactures instructions.
12) Short length pipe and pipe joint external to manhole shall not exceed 600mm from the inner face of manhole wall.
13) Toe holes of 230mm min. depth and galvanised steel safety railings to be provided in benching of sewers greater than 525mm dia. and depth to invert > 3.0m for access to invert.
14) A safety chain is to be provided on pipes that exceed 450mm dia. Mild steel safety chain shall be 10mm nominal size grade M(H) non-calibarted chain Type 1 complying with BS 4942 Part 2 or equivalent.
15) When depth of manholes to invert is > 3.0m ladders shall be used instead of rungs to BS 4211 or equivalent except that stringers should be not less than 65mm*12mm in section and rungs 25mm in dia. Fixed ladders should meet the dimensional requirements of BS 4211 or equivalent.
16) Ladder stringers should be adequately supported from the manhole wall at intervals of not more than 2.0m stringers should be bolted to cleats to facilitate renewal.
17) Ladders rungs handrails safety chains etc shall be hot dipped galvanised to BS 729 or equivalent. 18)Pipe should be cut flush with the inside surface of the manhole wall so that the channel extends the full length of the manhole (except for precast manholes). 19)Position of 910 mm opening in intermediate roof slab. -All manholes shall be watertight to the satisfaction of the Engineer. -Formwork to reinforced concrete and mass concrete shall comply with Class 2 Section 6.2.7 BS 8110:Part 1: 1997.Finish to the top of slabs shall comply with Type Section 6.2.7 BS 8110: Part 1 :1997.
20) For manholes >3.0m depth to invert use Cl 30N/20mm in situ concrete. Reinforcing mesh ref. A393 @ 5.16 kg/m to be fixed at mid point of wall. Additional reinforcement to be supplied over pipe crown.
21) For precast manholes chamber walls and cover slab to be constructed to BS EN 1917 and BS 5911-3.
23) For bedding and sealing of chamber rings the top ring(to precast cover slab) and bottom ring to be bedded with cement mortar . For intermediate rings joints to be sealed with approved pre-formed jointing strip.
24) Precast manholes to be surrounded with a minimum of 150mm thick grade Cl 20N/40mm.
25) Gully slot configurations shall be Type R in accordance with the DMRB ref. HA102. Gully covers gratings and frames shall comply with Load Class F900 in accordance with BS EN 1433:2002 for heavy duty imposed loads within the plant working area.
26) Expansion joint sealing compounds and sealants shall be accompanied by a manufacturers certificate of compliance. Expansion joints around drainage infrastructure (gullys, ACO channels and manhole slabs) shall be in accordance with the DMRB Series 1000. Joint seals shall comply with Cl 1017 cold applied Type N conforming to BS 5212-1 with minimum width 20mm and depth 15mm.
27) Drawing not to scale.
28) Vented manhole covers required at all Roof Storm runoff manhole locations (RS1 to RS5) to aid the syphonic drainage requirements
29) Compliance with the Design and Construction Guidance for foul and surface water sewers offered for adoption under the Code for adoption agreements for water and sewerage companies shall be applicable where required.

ANTI-FLOTATION CHECKS

Anti-flotation calculations have been carried out for both the Attenuation Tank and worst case manhole depths to ensure the groundwater level (2.0m below GL) does not result in excessive movement of the proposed drainage assets. A summary of the results are outlined below:

Material Density	
Water:	10.0 kN/m3
Stone (Type 3):	22.0 kN/m3
Geo-cell (Attenuation Tank)	1.50 kN m3
Concrete (Manhole):	
Gravity:	9.81 m/s2
Bouyancy Force (Fb)	
@ Attenuation Tank:	2403.45kN
@ Manhole:	55.45 kN
Attenuation Tank	
Area:(3.5 x 10.0m)	35m2
Depth Submerged:	0.7m
Volume Submerged:	24.50m3
Attenuation Self-weight:	824.04kN
Stone Self-weight (Above Tank):	3776.85kN
Total Downward Force:	4600.89kN
Downward Force > Bouyancy Force	OK
FoS (Min Required 1.5):	1.91
Manhole Hole (Worst Case - Deepest)	
Depth at S1:	2.60 m
Downward Force (Self-weight):	405.45 kN
Downward Force > Bouyancy Force	OK
FoS (Min Required 1.5):	10.0

DRAINAGE DESIGN SUBJECT TO AGREEMENT WITH LONDON BOROUGH OF CAMDEN (LLFA)

Rev	Description	Drawn	Checked	Approved	Con App
P02	Second Issue For the purposes of FRA & Planning App	22-09-21 KRJ	22-09-21 KRJ	22-09-21 KHR	
P01	First Issue	02-09-21 WY	02-09-21 KRJ	02-09-21 KHR	

HS2 accepts no responsibility for any circumstances which arise from the reproduction of this document after alteration, amendment or abbreviation or if it is issued in part or issued incompletely in any way.

© Crown Copyright and database right 2020. All rights reserved. Ordnance Survey Licence number 100049190

© Crown Copyright material is reproduced with the permission of Land Registry under delegated authority from the Controller of HMSO.

This material was last updated on 2020 and may not be copied, distributed, sold or published without the formal permission of Land Registry. Only an official copy of a title plan or register obtained from the Land Registry may be used for legal or other official purposes.

Scale with caution as distortion can occur.

Legends/Notes:

HS2

OFFICIAL

Registered in England
Registration No. 06791686
Registered office:
2 Snow Hill, Queensway,
Birmingham, B4 6GA

Project/Contract: 1CP01		Creator/Originator: MDS	Sub-Originator: WWH
Zone: SS08	Work Package Description: Maria Fidelis Accomodation	Discipline/Function: DS	System Description: DDE
Drawing Title: Maria Fidelis Welfare Foundation Drainage Plan Sheet 3 of 5		Drawn by: WY / Checked by: KR	Approved by: IV / Date: 22/09/2021
		Scale: 1:200 / Size: A1	Stage: / Suitability: S3
		Drawing No.: 1CP01-MDS_WWH-DS-DDE-SS08_SL23_GF-000001	Rev.: P02

APPENDIX 3

Greenfield Runoff Volumes Calculations

Greenfield Runoff Volume

FSR Data

Return Period (years)	1
Storm Duration (mins)	360
Region	England and Wales
M5-60 (mm)	20.000
Ratio R	0.400
Areal Reduction Factor	1.00
Area (ha)	0.245
SAAR (mm)	600
CWI	87.000
Urban	0.000
SPR	30.000

Results

Percentage Runoff (%)	20.50
Greenfield Runoff Volume (m^3)	10.987

©1982-2019 Innovyze

Greenfield Runoff Volume

FSR Data

Return Period (years)	30
Storm Duration (mins)	360
Region	England and Wales
M5-60 (mm)	20.000
Ratio R	0.400
Areal Reduction Factor	1.00
Area (ha)	0.245
SAAR (mm)	600
CWI	87.000
Urban	0.000
SPR	30.000

Results

Percentage Runoff (%)	22.46
Greenfield Runoff Volume (m^3)	26.531

©1982-2019 Innovyze

Greenfield Runoff Volume

FSR Data

Return Period (years)	100
Storm Duration (mins)	360
Region	England and Wales
M5-60 (mm)	20.000
Ratio R	0.400
Areal Reduction Factor	1.00
Area (ha)	0.245
SAAR (mm)	600
CWI	87.000
Urban	0.000
SPR	30.000

Results

Percentage Runoff (%)	24.48
Greenfield Runoff Volume (m^3)	37.488

©1982-2019 Innovyze

APPENDIX 4

Greenfield Runoff Rate Calculations

Greenfield runoff rate estimation for sites

www.uksuds.com | Greenfield runoff tool

Calculated by:	James Forsdyke
Site name:	Maria Fidelis
Site location:	London Borough of Camden

This is an estimation of the greenfield runoff rates that are used to meet normal best practice criteria in line with Environment Agency guidance "Rainfall runoff management for developments", SC030219 (2013) , the SuDS Manual C753 (Ciria, 2015) and the non-statutory standards for SuDS (Defra, 2015). This information on greenfield runoff rates may be
the basis for setting consents for the drainage of surface water runoff from sites.

Site Details

Latitude:	51.52805° N
Longitude:	0.1376° W
Reference:	798367351
Date:	Sep 15 2021 12:15

Runoff estimation approach IH124

Site characteristics

Total site area (ha): 0.2446

Methodology

Q_{BAR} estimation method:	Calculate from SPR and SAAR
SPR estimation method:	Calculate from SOIL type

Soil characteristics

	Default	Edited
SOIL type:	4	4
HOST class:	N/A	N/A
SPR/SPRHOST:	0.47	0.47

Hydrological characteristics

	Default	Edited
SAAR (mm):	616	616
Hydrological region:	6	6
Growth curve factor 1 year:	0.85	0.85
Growth curve factor 30 years:	2.3	2.3
Growth curve factor 100 years:	3.19	3.19
Growth curve factor 200 years:	3.74	3.74

Notes

(1) Is Q_{BAR} < 2.0 l/s/ha?

When Q_{BAR} is < 2.0 l/s/ha then limiting discharge rates are set at 2.0 l/s/ha.

(2) Are flow rates < 5.0 l/s?

Where flow rates are less than 5.0 l/s consent for discharge is usually set at 5.0 l/s if blockage from vegetation and other materials is possible. Lower consent flow rates may be set where the blockage risk is addressed by using appropriate drainage elements.

(3) Is SPR/SPRHOST ≤ 0.3?

Where groundwater levels are low enough the use of soakaways to avoid discharge offsite would normally be preferred for disposal of surface water runoff.

Greenfield runoff rates

	Default	Edited
Q_{BAR} (l/s):	1.02	1.02
1 in 1 year (l/s):	0.86	0.86
1 in 30 years (l/s):	2.34	2.34
1 in 100 year (l/s):	3.24	3.24
1 in 200 years (l/s):	3.8	3.8

This report was produced using the greenfield runoff tool developed by HR Wallingford and available at www.uksuds.com. The use of this tool is subject to the UK SuDS terms and conditions and licence agreement , which can both be found at www.uksuds.com/terms-and-conditions.htm. The outputs from this tool are estimates of greenfield runoff rates. The use of these results is the responsibility of the users of this tool. No liability will be accepted by HR Wallingford, the Environment Agency, CEH, Hydrosolutions or any other organisation for the use of this data in the design or operational characteristics of any drainage scheme.

APPENDIX 5

Revised Drainage Network Calculations

Design Settings

Rainfall Methodology	FSR	Maximum Time of Concentration (mins)	30.00
Return Period (years)	30	Maximum Rainfall (mm/hr)	50.0
Additional Flow (%)	0	Minimum Velocity (m/s)	1.00
FSR Region	England and Wales	Connection Type	Level Soffits
M5-60 (mm)	20.000	Minimum Backdrop Height (m)	0.200
Ratio-R	0.400	Preferred Cover Depth (m)	1.200
CV	0.750	Include Intermediate Ground	✓
Time of Entry (mins)	5.00	Enforce best practice design rules	✓

Adoptable Manhole Type

Max Width (mm)	Diameter (mm)	Max Width (mm)	Diameter (mm)
374	1200	749	1500
499	1350	900	1800

>900 Link+900 mm

Max Depth (m)	Diameter (mm)	Max Depth (m)	Diameter (mm)
1.500	1050	99.999	1200

Circular Link Type

Shape	Circular	Auto Increment (mm)	75
Barrels	1	Follow Ground	x

Available Diameters (mm)

100	150

Nodes

Name	Area (ha)	T of E (mins)	Cover Level (m)	Diameter (mm)	Easting (m)	Northing (m)	Depth (m)
Tank	0.112	5.00	25.000		-15.172	69.420	2.980
RS1			25.000	1200	-23.500	74.298	2.957
RS2			25.300	1200	-24.332	92.612	3.160
RS3			25.300	1200	67.369	92.735	3.064
S1			25.000	1200	-8.334	69.251	3.095
RS4			25.300	1200	89.005	92.390	2.413
RS5		5.00	25.300	1200	113.565	92.498	2.000

Flow+ v10.2 Copyright © 1988-2021 Causeway Technologies Ltd

Links

Name	US Node	DS Node	Length (m)	ks (mm) / n	US IL (m)	DS IL (m)	Fall (m)	Slope (1:X)	Dia (mm)	T of C (mins)	Rain (mm/hr)
1.002	RS3	RS2	14.400	0.600	22.236	22.140	0.096	150.0	300	5.99	50.0
1.004	RS1	Tank	3.500	0.600	22.043	22.020	0.023	152.2	300	6.23	50.0
1.003	RS2	RS1	14.500	0.600	22.140	22.043	0.097	149.5	300	6.18	50.0
1.001	RS4	RS3	25.800	0.600	22.887	22.236	0.651	39.6	300	5.81	50.0
1.000	RS5	RS4	52.800	0.600	23.300	22.887	0.413	127.8	300	5.63	50.0
1.005	Tank	S1	6.840	0.600	22.020	21.905	0.115	59.5	300	6.28	50.0

Name	Vel (m/s)	Cap (l/s)	Flow (l/s)	US Depth (m)	DS Depth (m)	Σ Area (ha)	Σ Add Inflow (l/s)	Pro Depth (mm)	Pro Velocity (m/s)
1.002	1.281	90.6	0.0	2.764	2.860	0.000	0.0	0	0.000
1.004	1.272	89.9	0.0	2.657	2.680	0.000	0.0	0	0.000
1.003	1.283	90.7	0.0	2.860	2.657	0.000	0.0	0	0.000
1.001	2.505	177.0	0.0	2.113	2.764	0.000	0.0	0	0.000
1.000	1.389	98.2	0.0	1.700	2.113	0.000	0.0	0	0.000
1.005	2.042	144.3	15.2	2.680	2.795	0.112	0.0	65	1.340

Pipeline Schedule

Link	Length (m)	Slope (1:X)	Dia (mm)	Link Type	US CL (m)	US IL (m)	US Depth (m)	DS CL (m)	DS IL (m)	DS Depth (m)
1.002	14.400	150.0	300	Circular	25.300	22.236	2.764	25.300	22.140	2.860
1.004	3.500	152.2	300	Circular	25.000	22.043	2.657	25.000	22.020	2.680
1.003	14.500	149.5	300	Circular	25.300	22.140	2.860	25.000	22.043	2.657
1.001	25.800	39.6	300	Circular	25.300	22.887	2.113	25.300	22.236	2.764
1.000	52.800	127.8	300	Circular	25.300	23.300	1.700	25.300	22.887	2.113
1.005	6.840	59.5	300	Circular	25.000	22.020	2.680	25.000	21.905	2.795

Link	US Node	Dia (mm)	Node Type	MH Type	DS Node	Dia (mm)	Node Type	MH Type
1.002	RS3	1200	Manhole	Adoptable	RS2	1200	Manhole	Adoptable
1.004	RS1	1200	Manhole	Adoptable	Tank		Junction	
1.003	RS2	1200	Manhole	Adoptable	RS1	1200	Manhole	Adoptable
1.001	RS4	1200	Manhole	Adoptable	RS3	1200	Manhole	Adoptable
1.000	RS5	1200	Manhole	Adoptable	RS4	1200	Manhole	Adoptable
1.005	Tank		Junction		S1	1200	Manhole	Adoptable

Manhole Schedule

Node	Easting (m)	Northing (m)	CL (m)	Depth (m)	Dia (mm)	Connections		Link	IL (m)	Dia (mm)
Tank	-15.172	69.420	25.000	2.980		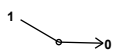	1	1.004	22.020	300
							0	1.005	22.020	300
RS1	-23.500	74.298	25.000	2.957	1200	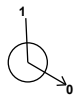	1	1.003	22.043	300
							0	1.004	22.043	300
RS2	-24.332	92.612	25.300	3.160	1200		1	1.002	22.140	300
							0	1.003	22.140	300

Flow+ v10.2 Copyright © 1988-2021 Causeway Technologies Ltd

Manhole Schedule

Node	Easting (m)	Northing (m)	CL (m)	Depth (m)	Dia (mm)	Connections		Link	IL (m)	Dia (mm)
RS3	67.369	92.735	25.300	3.064	1200		1	1.001	22.236	300
							0	1.002	22.236	300
S1	-8.334	69.251	25.000	3.095	1200		1	1.005	21.905	300
RS4	89.005	92.390	25.300	2.413	1200		1	1.000	22.887	300
							0	1.001	22.887	300
RS5	113.565	92.498	25.300	2.000	1200		0	1.000	23.300	300

Simulation Settings

Rainfall Methodology	FSR	Drain Down Time (mins)	240
FSR Region	England and Wales	Additional Storage (m³/ha)	20.0
M5-60 (mm)	20.000	Check Discharge Rate(s)	✓
Ratio-R	0.400	10 year (l/s)	0.8
Summer CV	0.750	30 year (l/s)	1.3
Winter CV	0.840	100 year (l/s)	1.7
Analysis Speed	Normal	Check Discharge Volume	✓
Skip Steady State	x	830 year +30% 360 minute (m³)	74

Storm Durations

15	30	60	120	180	240	360	480	600	720	960	1440

Return Period (years)	Climate Change (CC %)	Additional Area (A %)	Additional Flow (Q %)
10	40	0	0
30	40	0	0
100	40	0	0

Pre-development Discharge Rate

Site Makeup	Greenfield	Growth Factor 30 year	2.40
Greenfield Method	IH124	Growth Factor 100 year	3.19
Positively Drained Area (ha)	0.112	Betterment (%)	0
SAAR (mm)	680	QBar	0.5
Soil Index	4	Q 10 year (l/s)	0.8
SPR	0.47	Q 30 year (l/s)	1.3
Region	6	Q 100 year (l/s)	1.7
Growth Factor 10 year	1.62		

Flow+ v10.2 Copyright © 1988-2021 Causeway Technologies Ltd

Pre-development Discharge Volume

Site Makeup	Greenfield	Return Period (years)	830
Greenfield Method	FSR/FEH	Climate Change (%)	30
Positively Drained Area (ha)	0.112	Storm Duration (mins)	360
Soil Index	4	Betterment (%)	0
SPR	0.47	PR	0.517
CWI	102.222	Runoff Volume (m³)	74

Node S1 Online Hydro-Brake® Control

Flap Valve	x	Objective	(HE) Minimise upstream storage
Replaces Downstream Link	x	Sump Available	✓
Invert Level (m)	21.905	Product Number	CTL-SHE-0026-5000-2500-5000
Design Depth (m)	2.500	Min Outlet Diameter (m)	0.075
Design Flow (l/s)	0.5	Min Node Diameter (mm)	1200

Approval Settings

Node Size	✓	Proportional Velocity	✓
Node Losses	✓	Return Period (years)	30
Link Size	✓	Minimum Proportional Velocity (m/s)	0.750
Minimum Diameter (mm)	150	Maximum Proportional Velocity (m/s)	3.000
Link Length	✓	Surcharged Depth	✓
Maximum Length (m)	100.000	Return Period (years)	30
Coordinates	✓	Maximum Surcharged Depth (m)	0.100
Accuracy (m)	1.000	Flooding	✓
Crossings	✓	Return Period (years)	30
Cover Depth	✓	Time to Half Empty	✓
Minimum Cover Depth (m)	1.200	Return Period (years)	100
Maximum Cover Depth (m)	3.000	Discharge Rates	✓
Backdrops	✓	10 year (l/s)	0.8
Minimum Backdrop Height (m)	0.200	30 year (l/s)	1.3
Maximum Backdrop Height (m)	1.500	100 year (l/s)	1.7
Full Bore Velocity	✓	Discharge Volume	✓
Minimum Full Bore Velocity (m/s)	1.000	30 year +30% 360 minute (m³)	30
Maximum Full Bore Velocity (m/s)	3.000		

Rainfall

Event	Peak Intensity (mm/hr)	Average Intensity (mm/hr)	Event	Peak Intensity (mm/hr)	Average Intensity (mm/hr)
10 year +40% CC 15 minute summer	296.547	83.912	10 year +40% CC 480 minute summer	26.965	7.126
10 year +40% CC 15 minute winter	208.103	83.912	10 year +40% CC 480 minute winter	17.915	7.126
10 year +40% CC 30 minute summer	191.563	54.206	10 year +40% CC 600 minute summer	21.965	6.008
10 year +40% CC 30 minute winter	134.430	54.206	10 year +40% CC 600 minute winter	15.008	6.008
10 year +40% CC 60 minute summer	127.156	33.604	10 year +40% CC 720 minute summer	19.495	5.225
10 year +40% CC 60 minute winter	84.479	33.604	10 year +40% CC 720 minute winter	13.102	5.225
10 year +40% CC 120 minute summer	76.858	20.311	10 year +40% CC 960 minute summer	15.911	4.190
10 year +40% CC 120 minute winter	51.063	20.311	10 year +40% CC 960 minute winter	10.539	4.190
10 year +40% CC 180 minute summer	58.332	15.011	10 year +40% CC 1440 minute summer	11.444	3.067
10 year +40% CC 180 minute winter	37.917	15.011	10 year +40% CC 1440 minute winter	7.691	3.067
10 year +40% CC 240 minute summer	45.703	12.078	30 year +40% CC 15 minute summer	376.189	106.449
10 year +40% CC 240 minute winter	30.364	12.078	30 year +40% CC 15 minute winter	263.992	106.449
10 year +40% CC 360 minute summer	34.485	8.874	30 year +40% CC 30 minute summer	244.900	69.298
10 year +40% CC 360 minute winter	22.416	8.874	30 year +40% CC 30 minute winter	171.860	69.298

Flow+ v10.2 Copyright © 1988-2021 Causeway Technologies Ltd

Rainfall

Event	Peak Intensity (mm/hr)	Average Intensity (mm/hr)	Event	Peak Intensity (mm/hr)	Average Intensity (mm/hr)
30 year +40% CC 60 minute summer	163.225	43.136	100 year +40% CC 30 minute summer	320.551	90.705
30 year +40% CC 60 minute winter	108.443	43.136	100 year +40% CC 30 minute winter	224.948	90.705
30 year +40% CC 120 minute summer	98.613	26.061	100 year +40% CC 60 minute summer	214.603	56.713
30 year +40% CC 120 minute winter	65.516	26.061	100 year +40% CC 60 minute winter	142.577	56.713
30 year +40% CC 180 minute summer	74.617	19.202	100 year +40% CC 120 minute summer	129.587	34.246
30 year +40% CC 180 minute winter	48.503	19.202	100 year +40% CC 120 minute winter	86.094	34.246
30 year +40% CC 240 minute summer	58.245	15.393	100 year +40% CC 180 minute summer	97.729	25.149
30 year +40% CC 240 minute winter	38.697	15.393	100 year +40% CC 180 minute winter	63.526	25.149
30 year +40% CC 360 minute summer	43.710	11.248	100 year +40% CC 240 minute summer	75.977	20.078
30 year +40% CC 360 minute winter	28.413	11.248	100 year +40% CC 240 minute winter	50.477	20.078
30 year +40% CC 480 minute summer	34.053	8.999	100 year +40% CC 360 minute summer	56.677	14.585
30 year +40% CC 480 minute winter	22.624	8.999	100 year +40% CC 360 minute winter	36.841	14.585
30 year +40% CC 600 minute summer	27.658	7.565	100 year +40% CC 480 minute summer	43.979	11.622
30 year +40% CC 600 minute winter	18.898	7.565	100 year +40% CC 480 minute winter	29.219	11.622
30 year +40% CC 720 minute summer	24.485	6.562	100 year +40% CC 600 minute summer	35.604	9.738
30 year +40% CC 720 minute winter	16.456	6.562	100 year +40% CC 600 minute winter	24.327	9.738
30 year +40% CC 960 minute summer	19.901	5.240	100 year +40% CC 720 minute summer	31.433	8.424
30 year +40% CC 960 minute winter	13.183	5.240	100 year +40% CC 720 minute winter	21.125	8.424
30 year +40% CC 1440 minute summer	14.225	3.812	100 year +40% CC 960 minute summer	25.432	6.697
30 year +40% CC 1440 minute winter	9.560	3.812	100 year +40% CC 960 minute winter	16.847	6.697
100 year +40% CC 15 minute summer	488.233	138.153	100 year +40% CC 1440 minute summer	18.055	4.839
100 year +40% CC 15 minute winter	342.620	138.153	100 year +40% CC 1440 minute winter	12.134	4.839

Flow+ v10.2 Copyright © 1988-2021 Causeway Technologies Ltd

Results for 10 year +40% CC Critical Storm Duration. Lowest mass balance: 97.20%

Node Event	US Node	Peak (mins)	Level (m)	Depth (m)	Inflow (l/s)	Node Vol (m³)	Flood (m³)	Status
960 minute winter	Tank	915	23.080	1.060	2.8	36.3442	0.0000	SURCHARGED
960 minute winter	RS1	915	23.080	1.037	1.5	1.1730	0.0000	SURCHARGED
960 minute winter	RS2	930	23.080	0.940	0.8	1.0631	0.0000	SURCHARGED
960 minute winter	RS3	930	23.080	0.844	0.9	0.9545	0.0000	SURCHARGED
960 minute winter	S1	915	23.080	1.175	1.7	1.3289	0.0000	OK
960 minute winter	RS4	930	23.080	0.193	0.8	0.2181	0.0000	OK
15 minute summer	RS5	1	23.300	0.000	0.0	0.0000	0.0000	OK

Link Event (Upstream Depth)	US Node	Link	DS Node	Outflow (l/s)	Velocity (m/s)	Flow/Cap	Link Vol (m³)	Discharge Vol (m³)
960 minute winter	Tank	1.005	S1	1.7	0.185	0.012	0.4817	
960 minute winter	RS1	1.004	Tank	-1.5	-0.025	-0.016	0.2465	
960 minute winter	RS2	1.003	RS1	-0.8	-0.011	-0.008	1.0211	
960 minute winter	RS3	1.002	RS2	-0.9	-0.013	-0.009	1.0140	
960 minute winter	S1	Hydro-Brake®		0.4				20.7
960 minute winter	RS4	1.001	RS3	-0.8	-0.018	-0.005	1.5258	
15 minute summer	RS5	1.000	RS4	0.0	0.000	0.000	0.0000	

Flow+ v10.2 Copyright © 1988-2021 Causeway Technologies Ltd

Results for 30 year +40% CC Critical Storm Duration. Lowest mass balance: 97.20%

Node Event	US Node	Peak (mins)	Level (m)	Depth (m)	Inflow (l/s)	Node Vol (m³)	Flood (m³)	Status
960 minute winter	Tank	930	23.383	1.363	3.7	46.7454	0.0000	SURCHARGED
960 minute winter	RS1	930	23.384	1.341	1.2	1.5161	0.0000	SURCHARGED
960 minute winter	RS2	930	23.383	1.243	1.3	1.4060	0.0000	SURCHARGED
960 minute winter	RS3	930	23.383	1.147	0.8	1.2975	0.0000	SURCHARGED
960 minute winter	S1	930	23.383	1.478	1.2	1.6720	0.0000	OK
960 minute winter	RS4	930	23.383	0.496	1.4	0.5613	0.0000	SURCHARGED
960 minute winter	RS5	930	23.383	0.083	0.1	0.0942	0.0000	OK

Link Event (Upstream Depth)	US Node	Link	DS Node	Outflow (l/s)	Velocity (m/s)	Flow/Cap	Link Vol (m³)	Discharge Vol (m³)
960 minute winter	Tank	1.005	S1	1.2	0.184	0.008	0.4817	
960 minute winter	RS1	1.004	Tank	-1.2	-0.025	-0.014	0.2465	
960 minute winter	RS2	1.003	RS1	-1.3	-0.018	-0.014	1.0211	
960 minute winter	RS3	1.002	RS2	-0.8	-0.012	-0.009	1.0140	
960 minute winter	S1	Hydro-Brake®		0.4				22.6
960 minute winter	RS4	1.001	RS3	-1.4	-0.026	-0.008	1.8168	
960 minute winter	RS5	1.000	RS4	0.1	-0.003	0.001	2.2794	

Flow+ v10.2 Copyright © 1988-2021 Causeway Technologies Ltd

Results for 100 year +40% CC Critical Storm Duration. Lowest mass balance: 97.20%

Node Event	US Node	Peak (mins)	Level (m)	Depth (m)	Inflow (l/s)	Node Vol (m³)	Flood (m³)	Status
960 minute winter	Tank	930	24.660	2.640	4.9	55.6578	0.0000	SURCHARGED
960 minute winter	RS1	930	24.660	2.617	2.4	2.9598	0.0000	SURCHARGED
960 minute winter	RS2	930	24.658	2.518	1.9	2.8479	0.0000	SURCHARGED
960 minute winter	RS3	930	24.658	2.422	1.7	2.7389	0.0000	SURCHARGED
960 minute winter	S1	930	24.658	2.753	2.0	3.1135	0.0000	OK
960 minute winter	RS4	930	24.659	1.772	1.2	2.0039	0.0000	SURCHARGED
960 minute winter	RS5	930	24.659	1.359	0.5	1.5370	0.0000	SURCHARGED

Link Event (Upstream Depth)	US Node	Link	DS Node	Outflow (l/s)	Velocity (m/s)	Flow/Cap	Link Vol (m³)	Discharge Vol (m³)
960 minute winter	Tank	1.005	S1	2.0	0.184	0.014	0.4817	
960 minute winter	RS1	1.004	Tank	-2.4	-0.035	-0.027	0.2465	
960 minute winter	RS2	1.003	RS1	-1.9	-0.027	-0.021	1.0211	
960 minute winter	RS3	1.002	RS2	-1.7	-0.025	-0.019	1.0140	
960 minute winter	S1	Hydro-Brake®		0.5				26.4
960 minute winter	RS4	1.001	RS3	-1.2	-0.018	-0.007	1.8168	
960 minute winter	RS5	1.000	RS4	-0.5	-0.012	-0.006	3.7181	

Flow+ v10.2 Copyright © 1988-2021 Causeway Technologies Ltd

Design Settings

Rainfall Methodology	FSR	Maximum Time of Concentration (mins)	30.00
Return Period (years)	30	Maximum Rainfall (mm/hr)	50.0
Additional Flow (%)	0	Minimum Velocity (m/s)	1.00
FSR Region	England and Wales	Connection Type	Level Soffits
M5-60 (mm)	20.000	Minimum Backdrop Height (m)	0.200
Ratio-R	0.400	Preferred Cover Depth (m)	1.200
CV	0.750	Include Intermediate Ground	✓
Time of Entry (mins)	5.00	Enforce best practice design rules	✓

Adoptable Manhole Type

Max Width (mm)	Diameter (mm)	Max Width (mm)	Diameter (mm)
374	1200	749	1500
499	1350	900	1800

>900 Link+900 mm

Max Depth (m)	Diameter (mm)	Max Depth (m)	Diameter (mm)
1.500	1050	99.999	1200

Circular Link Type

Shape	Circular	Auto Increment (mm)	75
Barrels	1	Follow Ground	x

Available Diameters (mm)

100	150

Nodes

Name	Area (ha)	T of E (mins)	Cover Level (m)	Diameter (mm)	Easting (m)	Northing (m)	Depth (m)
S1			25.000	1350	-0.450	-1.030	2.690
S2	0.002	5.00	25.300	1350	-41.009	-39.849	2.951
S3	0.004	5.00	25.300	1200	-122.882	-43.051	2.901
S4	0.029	5.00	25.300	1200	-166.792	17.782	2.807
S5	0.023	5.00	25.275	1200	-166.792	173.752	2.685
S6	0.011	5.00	25.300	1200	234.797	173.295	2.150
S6A		5.00	25.300	1200	238.914	-17.894	2.006
S7	0.007	5.00	25.300	1200	47.267	-40.764	1.556
S7A		5.00	25.300	1200	134.629	-41.679	1.500
1			25.000	1200	4.166	7.447	2.786

Flow+ v10.2 Copyright © 1988-2021 Causeway Technologies Ltd

Links

Name	US Node	DS Node	Length (m)	ks (mm) / n	US IL (m)	DS IL (m)	Fall (m)	Slope (1:X)	Dia (mm)	T of C (mins)	Rain (mm/hr)
1.000	S6A	S6	21.600	0.600	23.294	23.150	0.144	150.0	300	5.28	50.0
1.001	S6	S5	84.000	0.600	23.150	22.590	0.560	150.0	300	6.37	50.0
1.002	S5	S4	14.600	0.600	22.590	22.493	0.097	150.5	300	6.56	50.0
1.003	S4	S3	14.100	0.600	22.493	22.399	0.094	150.0	300	6.75	50.0
1.004	S3	S2	7.400	0.600	22.399	22.349	0.050	148.0	300	6.84	50.0
1.005	S2	S1	56.142	0.600	22.349	22.310	0.039	1439.5	400	8.76	50.0
2.000	S7A	S7	13.500	0.600	23.800	23.744	0.056	241.1	300	5.22	50.0
2.001	S7	S1	11.000	0.600	23.744	23.500	0.244	45.1	300	5.30	50.0
1.006	S1	1	9.652	0.600	22.310	22.214	0.096	100.5	150	8.92	50.0

Name	Vel (m/s)	Cap (l/s)	Flow (l/s)	US Depth (m)	DS Depth (m)	Σ Area (ha)	Σ Add Inflow (l/s)	Pro Depth (mm)	Pro Velocity (m/s)
1.000	1.281	90.6	0.0	1.706	1.850	0.000	0.0	0	0.000
1.001	1.281	90.6	1.4	1.850	2.385	0.011	0.0	26	0.476
1.002	1.279	90.4	4.5	2.385	2.507	0.033	0.0	45	0.670
1.003	1.281	90.6	8.4	2.507	2.601	0.062	0.0	61	0.808
1.004	1.290	91.2	8.8	2.601	2.651	0.065	0.0	63	0.828
1.005	0.489	61.4	9.1	2.551	2.290	0.067	0.0	104	0.352
2.000	1.008	71.3	0.0	1.200	1.256	0.000	0.0	0	0.000
2.001	2.347	165.9	0.9	1.256	1.200	0.007	0.0	16	0.638
1.006	1.002	17.7	10.0	2.540	2.636	0.074	0.0	81	1.031

Pipeline Schedule

Link	Length (m)	Slope (1:X)	Dia (mm)	Link Type	US CL (m)	US IL (m)	US Depth (m)	DS CL (m)	DS IL (m)	DS Depth (m)
1.000	21.600	150.0	300	Circular	25.300	23.294	1.706	25.300	23.150	1.850
1.001	84.000	150.0	300	Circular	25.300	23.150	1.850	25.275	22.590	2.385
1.002	14.600	150.5	300	Circular	25.275	22.590	2.385	25.300	22.493	2.507
1.003	14.100	150.0	300	Circular	25.300	22.493	2.507	25.300	22.399	2.601
1.004	7.400	148.0	300	Circular	25.300	22.399	2.601	25.300	22.349	2.651
1.005	56.142	1439.5	400	Circular	25.300	22.349	2.551	25.000	22.310	2.290
2.000	13.500	241.1	300	Circular	25.300	23.800	1.200	25.300	23.744	1.256
2.001	11.000	45.1	300	Circular	25.300	23.744	1.256	25.000	23.500	1.200
1.006	9.652	100.5	150	Circular	25.000	22.310	2.540	25.000	22.214	2.636

Link	US Node	Dia (mm)	Node Type	MH Type	DS Node	Dia (mm)	Node Type	MH Type
1.000	S6A	1200	Manhole	Adoptable	S6	1200	Manhole	Adoptable
1.001	S6	1200	Manhole	Adoptable	S5	1200	Manhole	Adoptable
1.002	S5	1200	Manhole	Adoptable	S4	1200	Manhole	Adoptable
1.003	S4	1200	Manhole	Adoptable	S3	1200	Manhole	Adoptable
1.004	S3	1200	Manhole	Adoptable	S2	1350	Manhole	Adoptable
1.005	S2	1350	Manhole	Adoptable	S1	1350	Manhole	Adoptable
2.000	S7A	1200	Manhole	Adoptable	S7	1200	Manhole	Adoptable
2.001	S7	1200	Manhole	Adoptable	S1	1350	Manhole	Adoptable
1.006	S1	1350	Manhole	Adoptable	1	1200	Manhole	Adoptable

Flow+ v10.2 Copyright © 1988-2021 Causeway Technologies Ltd

Manhole Schedule

Node	Easting (m)	Northing (m)	CL (m)	Depth (m)	Dia (mm)	Connections		Link	IL (m)	Dia (mm)
S1	-0.450	-1.030	25.000	2.690	1350	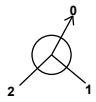	1	2.001	23.500	300
							2	1.005	22.310	400
							0	1.006	22.310	150
S2	-41.009	-39.849	25.300	2.951	1350	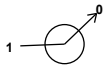	1	1.004	22.349	300
							0	1.005	22.349	400
S3	-122.882	-43.051	25.300	2.901	1200		1	1.003	22.399	300
							0	1.004	22.399	300
S4	-166.792	17.782	25.300	2.807	1200	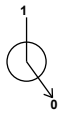	1	1.002	22.493	300
							0	1.003	22.493	300
S5	-166.792	173.752	25.275	2.685	1200		1	1.001	22.590	300
							0	1.002	22.590	300
S6	234.797	173.295	25.300	2.150	1200		1	1.000	23.150	300
							0	1.001	23.150	300
S6A	238.914	-17.894	25.300	2.006	1200					
							0	1.000	23.294	300
S7	47.267	-40.764	25.300	1.556	1200	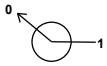	1	2.000	23.744	300
							0	2.001	23.744	300
S7A	134.629	-41.679	25.300	1.500	1200					
							0	2.000	23.800	300
1	4.166	7.447	25.000	2.786	1200		1	1.006	22.214	150

Simulation Settings

Rainfall Methodology	FSR	Drain Down Time (mins)	240
FSR Region	England and Wales	Additional Storage (m³/ha)	20.0
M5-60 (mm)	20.000	Check Discharge Rate(s)	✓
Ratio-R	0.400	10 year (l/s)	1.4
Summer CV	0.750	30 year (l/s)	1.9
Winter CV	0.840	100 year (l/s)	2.5
Analysis Speed	Normal	Check Discharge Volume	✓
Skip Steady State	x	100 year 360 minute (m³)	68

Flow+ v10.2 Copyright © 1988-2021 Causeway Technologies Ltd

Storm Durations

15	30	60	120	180	240	360	480	600	720	960	1440

Return Period (years)	Climate Change (CC %)	Additional Area (A %)	Additional Flow (Q %)
10	40	0	0
30	40	0	0
100	40	0	0

Pre-development Discharge Rate

Site Makeup	Greenfield	Growth Factor 30 year	1.95
Greenfield Method	IH124	Growth Factor 100 year	2.48
Positively Drained Area (ha)	0.240	Betterment (%)	0
SAAR (mm)	616	QBar	1.0
Soil Index	4	Q 10 year (l/s)	
SPR	0.47	Q 30 year (l/s)	1.9
Region	1	Q 100 year (l/s)	2.5
Growth Factor 10 year	1.45		

Pre-development Discharge Volume

Site Makeup	Greenfield	Return Period (years)	100
Greenfield Method	FSR/FEH	Climate Change (%)	0
Positively Drained Area (ha)	0.240	Storm Duration (mins)	360
Soil Index	4	Betterment (%)	0
SPR	0.47	PR	0.453
CWI	102.222	Runoff Volume (m^3)	68

Node 1 Online Hydro-Brake® Control

Flap Valve	x	Objective	(HE) Minimise upstream storage
Replaces Downstream Link	x	Sump Available	✓
Invert Level (m)	22.214	Product Number	CTL-SHE-0026-5000-2500-5000
Design Depth (m)	2.500	Min Outlet Diameter (m)	0.075
Design Flow (l/s)	0.5	Min Node Diameter (mm)	1200

Approval Settings

Node Size	✓	Proportional Velocity	✓
Node Losses	✓	Return Period (years)	30
Link Size	✓	Minimum Proportional Velocity (m/s)	0.750
Minimum Diameter (mm)	150	Maximum Proportional Velocity (m/s)	3.000
Link Length	✓	Surcharged Depth	✓
Maximum Length (m)	100.000	Return Period (years)	30
Coordinates	✓	Maximum Surcharged Depth (m)	0.100
Accuracy (m)	1.000	Flooding	✓
Crossings	✓	Return Period (years)	30
Cover Depth	✓	Time to Half Empty	✓
Minimum Cover Depth (m)	1.200	Return Period (years)	100
Maximum Cover Depth (m)	3.000	Discharge Rates	✓
Backdrops	✓	10 year (l/s)	1.4
Minimum Backdrop Height (m)	0.200	30 year (l/s)	1.9
Maximum Backdrop Height (m)	1.500	100 year (l/s)	2.5
Full Bore Velocity	✓	Discharge Volume	✓
Minimum Full Bore Velocity (m/s)	1.000	100 year 360 minute (m^3)	68
Maximum Full Bore Velocity (m/s)	3.000		

Flow+ v10.2 Copyright © 1988-2021 Causeway Technologies Ltd

Rainfall

Event	Peak Intensity (mm/hr)	Average Intensity (mm/hr)
10 year +40% CC 15 minute summer	296.547	83.912
10 year +40% CC 15 minute winter	208.103	83.912
10 year +40% CC 30 minute summer	191.563	54.206
10 year +40% CC 30 minute winter	134.430	54.206
10 year +40% CC 60 minute summer	127.156	33.604
10 year +40% CC 60 minute winter	84.479	33.604
10 year +40% CC 120 minute summer	76.858	20.311
10 year +40% CC 120 minute winter	51.063	20.311
10 year +40% CC 180 minute summer	58.332	15.011
10 year +40% CC 180 minute winter	37.917	15.011
10 year +40% CC 240 minute summer	45.703	12.078
10 year +40% CC 240 minute winter	30.364	12.078
10 year +40% CC 360 minute summer	34.485	8.874
10 year +40% CC 360 minute winter	22.416	8.874
10 year +40% CC 480 minute summer	26.965	7.126
10 year +40% CC 480 minute winter	17.915	7.126
10 year +40% CC 600 minute summer	21.965	6.008
10 year +40% CC 600 minute winter	15.008	6.008
10 year +40% CC 720 minute summer	19.495	5.225
10 year +40% CC 720 minute winter	13.102	5.225
10 year +40% CC 960 minute summer	15.911	4.190
10 year +40% CC 960 minute winter	10.539	4.190
10 year +40% CC 1440 minute summer	11.444	3.067
10 year +40% CC 1440 minute winter	7.691	3.067
30 year +40% CC 15 minute summer	376.189	106.449
30 year +40% CC 15 minute winter	263.992	106.449
30 year +40% CC 30 minute summer	244.900	69.298
30 year +40% CC 30 minute winter	171.860	69.298
30 year +40% CC 60 minute summer	163.225	43.136
30 year +40% CC 60 minute winter	108.443	43.136
30 year +40% CC 120 minute summer	98.613	26.061
30 year +40% CC 120 minute winter	65.516	26.061
30 year +40% CC 180 minute summer	74.617	19.202
30 year +40% CC 180 minute winter	48.503	19.202
30 year +40% CC 240 minute summer	58.245	15.393
30 year +40% CC 240 minute winter	38.697	15.393
30 year +40% CC 360 minute summer	43.710	11.248
30 year +40% CC 360 minute winter	28.413	11.248
30 year +40% CC 480 minute summer	34.053	8.999
30 year +40% CC 480 minute winter	22.624	8.999
30 year +40% CC 600 minute summer	27.658	7.565
30 year +40% CC 600 minute winter	18.898	7.565
30 year +40% CC 720 minute summer	24.485	6.562
30 year +40% CC 720 minute winter	16.456	6.562
30 year +40% CC 960 minute summer	19.901	5.240
30 year +40% CC 960 minute winter	13.183	5.240
30 year +40% CC 1440 minute summer	14.225	3.812
30 year +40% CC 1440 minute winter	9.560	3.812
100 year +40% CC 15 minute summer	488.233	138.153
100 year +40% CC 15 minute winter	342.620	138.153
100 year +40% CC 30 minute summer	320.551	90.705
100 year +40% CC 30 minute winter	224.948	90.705
100 year +40% CC 60 minute summer	214.603	56.713
100 year +40% CC 60 minute winter	142.577	56.713
100 year +40% CC 120 minute summer	129.587	34.246
100 year +40% CC 120 minute winter	86.094	34.246
100 year +40% CC 180 minute summer	97.729	25.149
100 year +40% CC 180 minute winter	63.526	25.149
100 year +40% CC 240 minute summer	75.977	20.078
100 year +40% CC 240 minute winter	50.477	20.078
100 year +40% CC 360 minute summer	56.677	14.585
100 year +40% CC 360 minute winter	36.841	14.585
100 year +40% CC 480 minute summer	43.979	11.622
100 year +40% CC 480 minute winter	29.219	11.622
100 year +40% CC 600 minute summer	35.604	9.738
100 year +40% CC 600 minute winter	24.327	9.738
100 year +40% CC 720 minute summer	31.433	8.424
100 year +40% CC 720 minute winter	21.125	8.424
100 year +40% CC 960 minute summer	25.432	6.697
100 year +40% CC 960 minute winter	16.847	6.697
100 year +40% CC 1440 minute summer	18.055	4.839
100 year +40% CC 1440 minute winter	12.134	4.839

Flow+ v10.2 Copyright © 1988-2021 Causeway Technologies Ltd

Results for 10 year +40% CC Critical Storm Duration. Lowest mass balance: 91.66%

Node Event	US Node	Peak (mins)	Level (m)	Depth (m)	Inflow (l/s)	Node Vol (m³)	Flood (m³)	Status
480 minute winter	S1	456	23.409	1.099	1.3	1.5727	0.0000	SURCHARGED
480 minute winter	S2	464	23.410	1.061	1.6	1.5321	0.0000	SURCHARGED
480 minute winter	S3	456	23.411	1.012	1.7	1.1685	0.0000	SURCHARGED
480 minute winter	S4	456	23.411	0.918	1.9	1.2261	0.0000	SURCHARGED
480 minute winter	S5	456	23.410	0.820	1.9	1.0654	0.0000	SURCHARGED
480 minute winter	S6	456	23.410	0.260	1.3	0.3194	0.0000	OK
480 minute winter	S6A	456	23.411	0.117	0.3	0.1318	0.0000	OK
15 minute winter	S7	10	23.770	0.026	2.6	0.0322	0.0000	OK
15 minute summer	S7A	1	23.800	0.000	0.0	0.0000	0.0000	OK
480 minute winter	1	448	23.409	1.195	0.7	1.3518	0.0000	OK

Link Event (Upstream Depth)	US Node	Link	DS Node	Outflow (l/s)	Velocity (m/s)	Flow/Cap	Link Vol (m³)	Discharge Vol (m³)
480 minute winter	S1	1.006	1	0.7	0.200	0.042	0.1699	
480 minute winter	S2	1.005	S1	1.0	0.163	0.016	7.0284	
480 minute winter	S3	1.004	S2	1.5	0.269	0.016	0.5211	
480 minute winter	S4	1.003	S3	1.6	0.364	0.018	0.9929	
480 minute winter	S5	1.002	S4	1.0	0.302	0.011	1.0281	
480 minute winter	S6	1.001	S5	-1.0	0.193	-0.011	5.6792	
480 minute winter	S6A	1.000	S6	0.4	0.009	0.004	0.9728	
15 minute winter	S7	2.001	S1	2.5	0.855	0.015	0.0325	
15 minute summer	S7A	2.000	S7	0.0	0.000	0.000	0.0194	
480 minute winter	1	Hydro-Brake®		0.4				12.7

Flow+ v10.2 Copyright © 1988-2021 Causeway Technologies Ltd

Results for 30 year +40% CC Critical Storm Duration. Lowest mass balance: 91.66%

Node Event	US Node	Peak (mins)	Level (m)	Depth (m)	Inflow (l/s)	Node Vol (m³)	Flood (m³)	Status
600 minute winter	S1	570	23.994	1.684	1.0	2.4099	0.0000	SURCHARGED
600 minute winter	S2	570	23.994	1.645	1.8	2.3751	0.0000	SURCHARGED
600 minute winter	S3	585	23.995	1.596	1.5	1.8434	0.0000	SURCHARGED
600 minute winter	S4	570	23.994	1.501	1.7	2.0032	0.0000	SURCHARGED
600 minute winter	S5	570	23.995	1.405	2.2	1.8248	0.0000	SURCHARGED
600 minute winter	S6	570	23.995	0.845	1.5	1.0388	0.0000	SURCHARGED
600 minute winter	S6A	570	23.995	0.701	0.5	0.7925	0.0000	SURCHARGED
600 minute winter	S7	570	23.994	0.250	0.4	0.3044	0.0000	OK
600 minute winter	S7A	570	23.994	0.194	0.4	0.2190	0.0000	OK
600 minute winter	1	570	23.994	1.780	0.7	2.0128	0.0000	OK

Link Event (Upstream Depth)	US Node	Link	DS Node	Outflow (l/s)	Velocity (m/s)	Flow/Cap	Link Vol (m³)	Discharge Vol (m³)
600 minute winter	S1	1.006	1	0.7	0.122	0.042	0.1699	
600 minute winter	S2	1.005	S1	0.8	0.155	0.013	7.0284	
600 minute winter	S3	1.004	S2	1.8	0.229	0.020	0.5211	
600 minute winter	S4	1.003	S3	1.4	0.346	0.015	0.9929	
600 minute winter	S5	1.002	S4	0.9	0.271	0.010	1.0281	
600 minute winter	S6	1.001	S5	-1.1	0.187	-0.013	5.9152	
600 minute winter	S6A	1.000	S6	-0.5	-0.012	-0.006	1.5211	
600 minute winter	S7	2.001	S1	0.4	0.457	0.002	0.7326	
600 minute winter	S7A	2.000	S7	-0.4	-0.014	-0.005	0.7482	
600 minute winter	1	Hydro-Brake®		0.4				16.7

Flow+ v10.2 Copyright © 1988-2021 Causeway Technologies Ltd

Results for 100 year +40% CC Critical Storm Duration. Lowest mass balance: 91.66%

Node Event	US Node	Peak (mins)	Level (m)	Depth (m)	Inflow (l/s)	Node Vol (m³)	Flood (m³)	Status
720 minute winter	S1	690	24.917	2.607	1.7	3.7307	0.0000	FLOOD RISK
720 minute winter	S2	690	24.919	2.570	1.7	3.7107	0.0000	SURCHARGED
720 minute winter	S3	690	24.918	2.519	2.3	2.9093	0.0000	SURCHARGED
720 minute winter	S4	690	24.917	2.424	2.2	3.2366	0.0000	SURCHARGED
720 minute winter	S5	690	24.917	2.327	2.5	3.0229	0.0000	SURCHARGED
720 minute winter	S6	690	24.917	1.767	2.2	2.1738	0.0000	SURCHARGED
720 minute winter	S6A	690	24.918	1.624	0.6	1.8362	0.0000	SURCHARGED
720 minute winter	S7	690	24.917	1.173	1.0	1.4275	0.0000	SURCHARGED
720 minute winter	S7A	690	24.917	1.117	0.4	1.2630	0.0000	SURCHARGED
720 minute winter	1	690	24.916	2.702	0.8	3.0564	0.0000	OK

Link Event (Upstream Depth)	US Node	Link	DS Node	Outflow (l/s)	Velocity (m/s)	Flow/Cap	Link Vol (m³)	Discharge Vol (m³)
720 minute winter	S1	1.006	1	0.8	0.147	0.043	0.1699	
720 minute winter	S2	1.005	S1	1.7	0.155	0.028	7.0284	
720 minute winter	S3	1.004	S2	1.7	0.249	0.019	0.5211	
720 minute winter	S4	1.003	S3	2.1	0.365	0.023	0.9929	
720 minute winter	S5	1.002	S4	-1.4	0.259	-0.015	1.0281	
720 minute winter	S6	1.001	S5	-1.7	0.171	-0.019	5.9152	
720 minute winter	S6A	1.000	S6	-0.6	-0.023	-0.007	1.5211	
720 minute winter	S7	2.001	S1	-0.7	0.457	-0.004	0.7746	
720 minute winter	S7A	2.000	S7	-0.4	0.011	-0.006	0.9507	
720 minute winter	1	Hydro-Brake®		0.5				48.1

Flow+ v10.2 Copyright © 1988-2021 Causeway Technologies Ltd