Do Not Scale - If in Doubt Ask

System:
Reynaers CS 77

Glass:
U glass =1.0 W/m2/K
G value = 0.4
Warm Edge RAL9004
Low Iron (TBC)

Color:
Inside & Outside
Tiger Drylac 029/65650

Notes:

Window ref.	Type	Location	Structural	
			w(mm)	h(mm)
W1.12	1 - G	First Floor - A1/A3 unit	2520	1750
W1.13	1 - G	First Floor - A1/A3 unit	2520	1750

View from outside

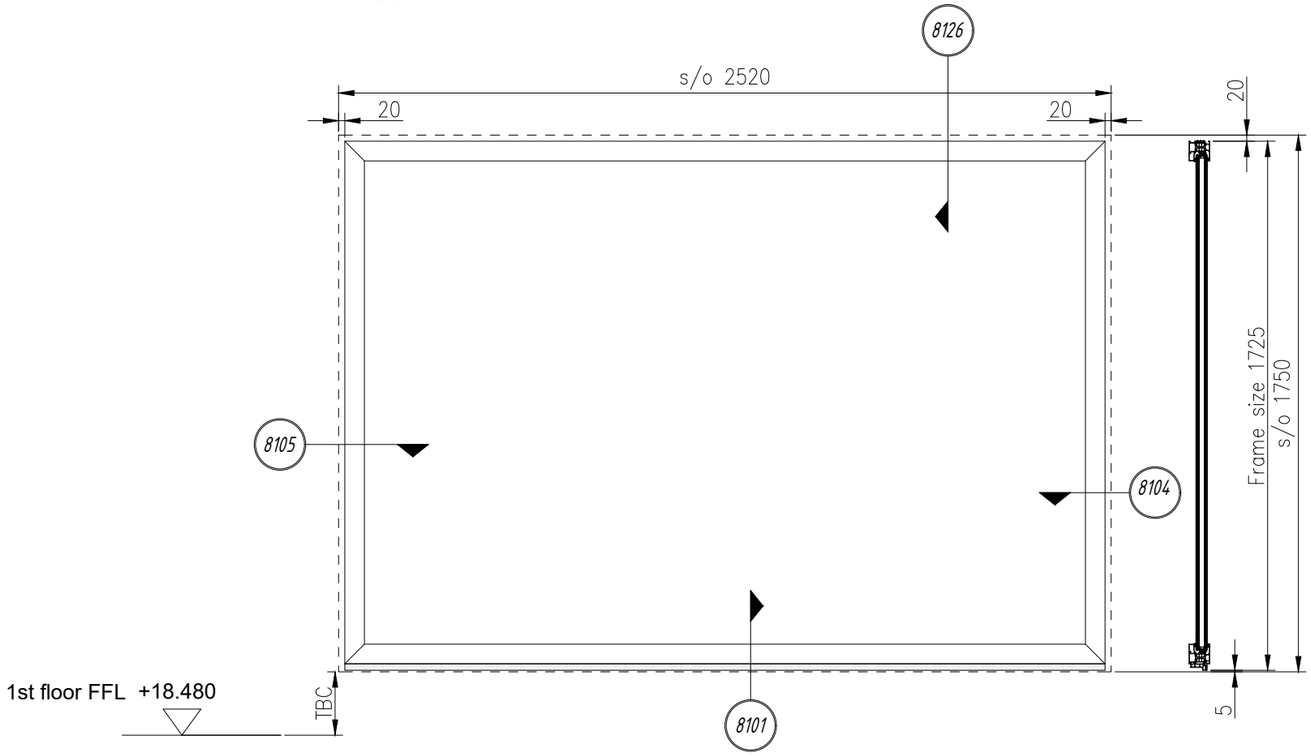

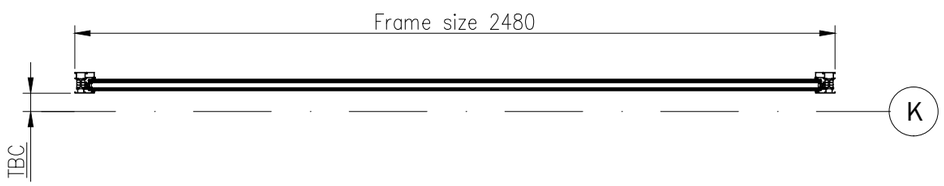

DMITRO façades

DMITRO FACADES LTD
Unit 17 Dunstall Estate
Leigh Place, Welling
London
DA16 3JH

Tel: 0207 254 4603
E-mail: office@dmitrofacades.co.uk

Dimensions in Millimeters

Revision	Description	Edited by	Checked by	Approved	Date
P01	Issued for comments/approval	JA			03.03.2021
C1	Construction issue	JA			17.05.2021

SITE: Greville Street
CLIENT: RED Construction
DRAWING TITLE: Windows W1.12 & W1.13

SCALE 1:20	DATE DRAWN 17.05.2021	DRAWN BY Jurij Avizen	
DRG NO GS-DFL-XX-01-DR-X-8013		REV. C1	
Purpose of Issue S3	STATUS CONSTRUCTION		
ORIGINAL SIZE A3			