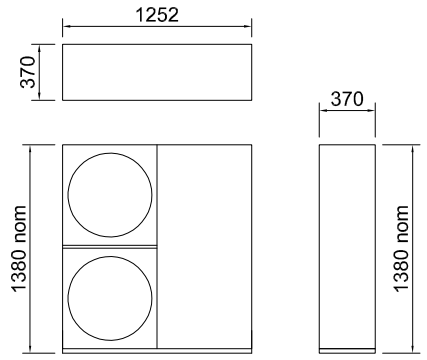

HITACHI YUTAKI-M
RASM-5(V)NE
[1:25 scale @ A1]

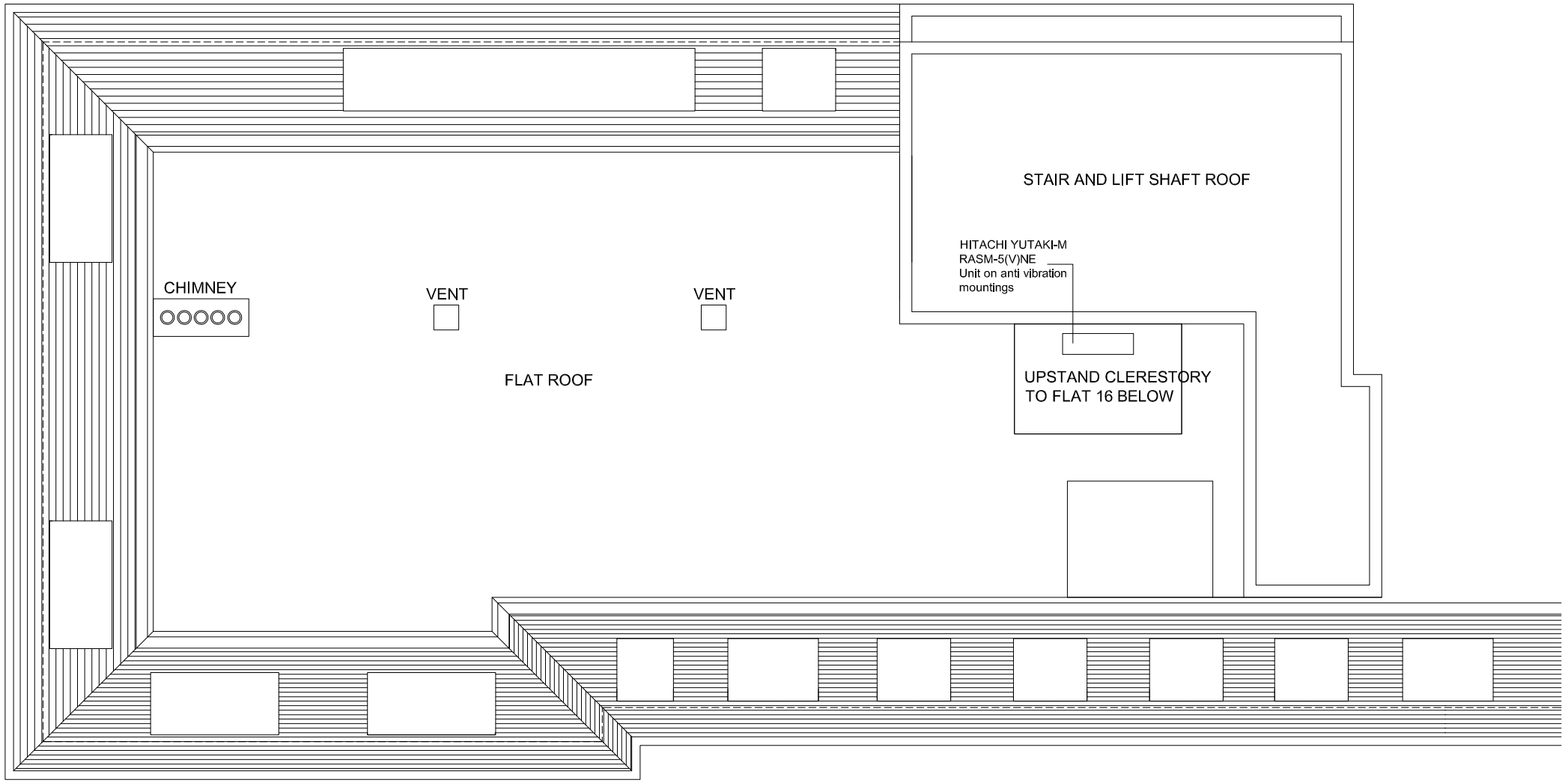

ROOF PLAN

1:100 0 1000 2000 3000 4000 5000

1:1 0 10 20 30 40 50

© Copyright Andrew Neil Associates
Do not scale from the drawing. Report all discrepancies to Andrew Neil Associates immediately.
All dimensions to be confirmed by the Contractor prior to commencement of the works.

Revisions

Client: Mr D Ezekiel

Project: 16 St.Stephens Close London NW8
Proposed Apartment refurbishment

Drawing: Proposed Roof Plan

Date: October 2019

Project No: 19/25

Scale: 1:100 @ A3

Drawing No: PL-205

ANDREW NEIL ASSOCIATES LTD
CHARTERED ARCHITECTS AND DESIGNERS
ACSTRELL HOUSE, ROAD FOR WALD, STEVENAGE, HERTFORDSHIRE SG2 8TD
TELEPHONE: 01438 749299 FACSIMILE: 01438 749209
WEBSITE: www.anla.uk.net E-MAIL: mail@anla.uk.net