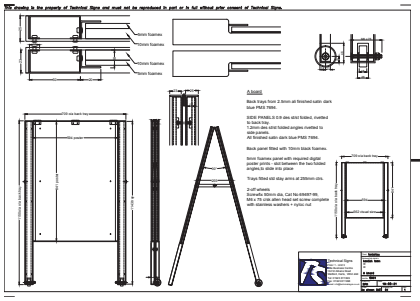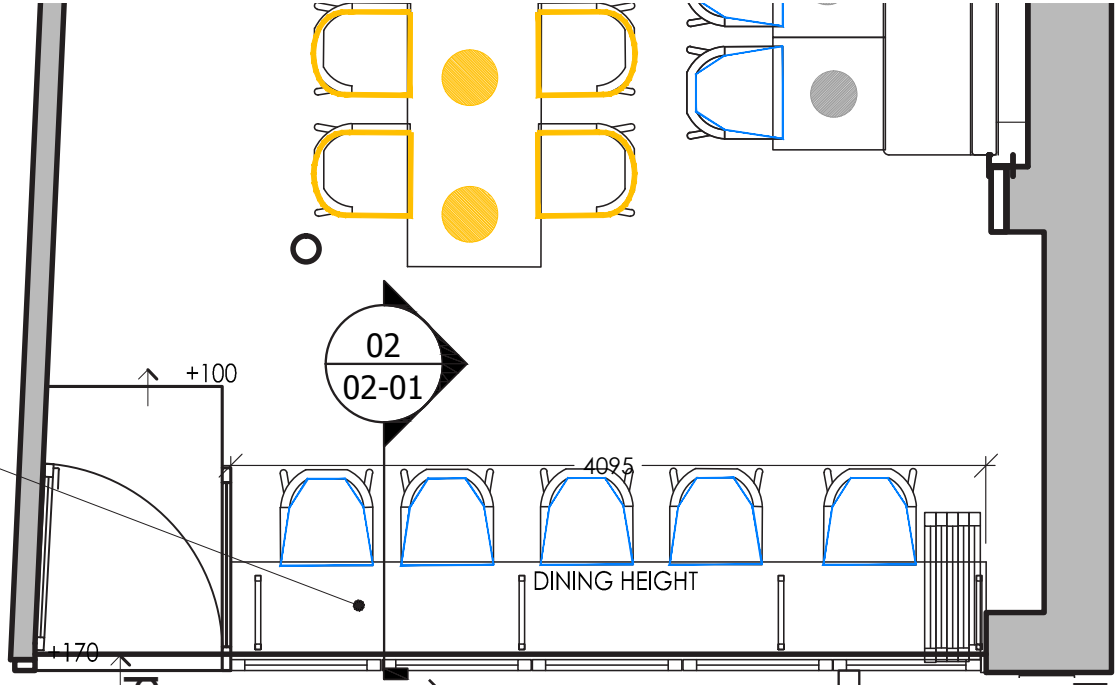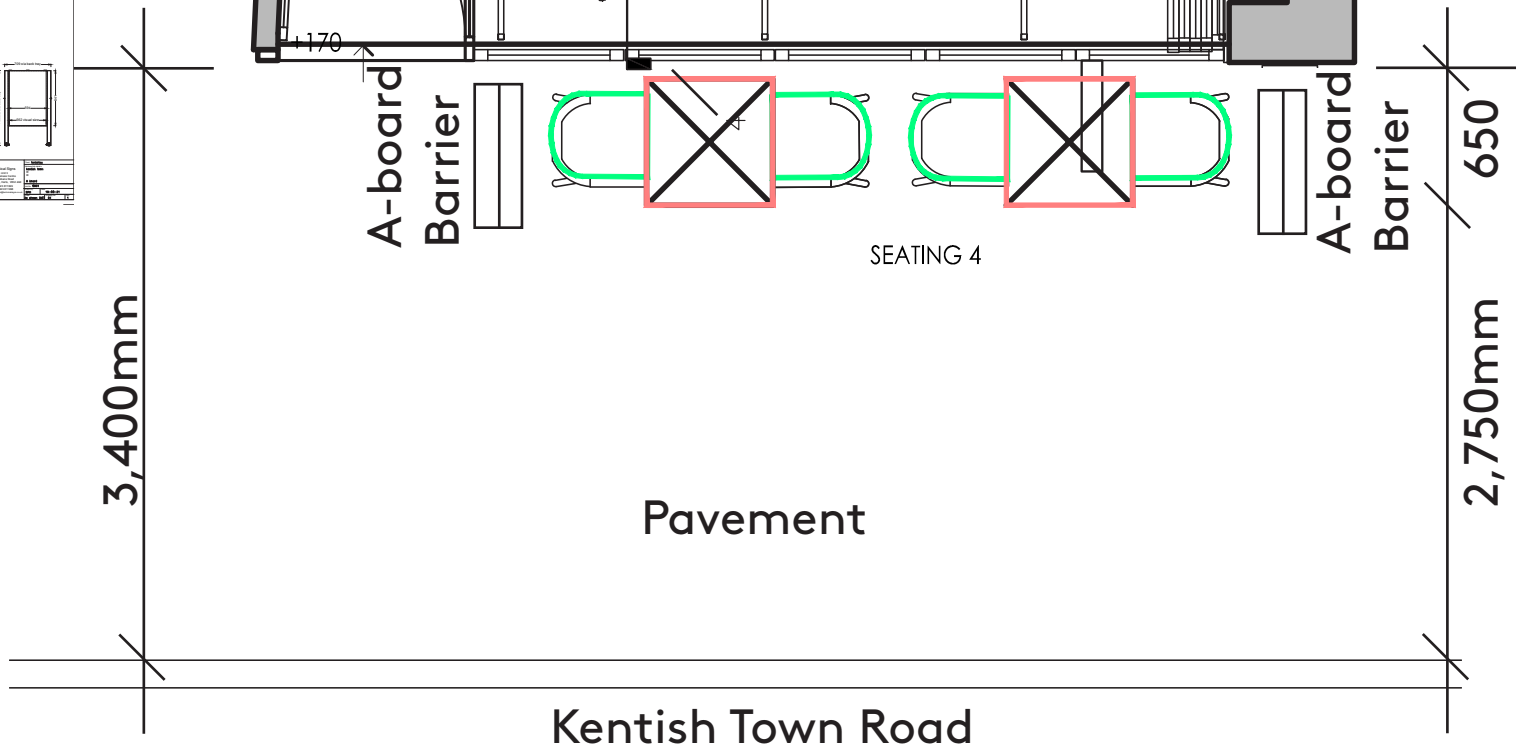Nolita Side Chair	Polyester powder coated steel frame, seat and back, Yellow finish (Gl100E) H: 770mm, W: 550mm, D: 535mm, SH: 465mm	4
Painted Steel Table Top	700mm square, steel top, standard factory finish - TBC Thickness: 12mm Edge Profile: Straight Waterproof MDF core W: 700mm, D: 700mm	2