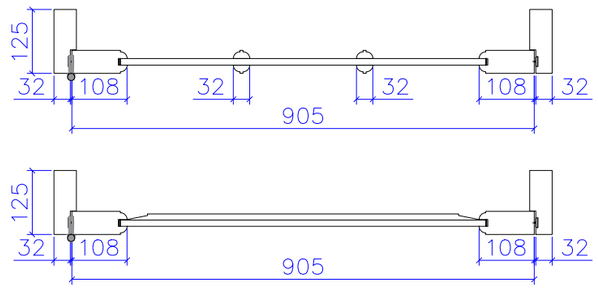





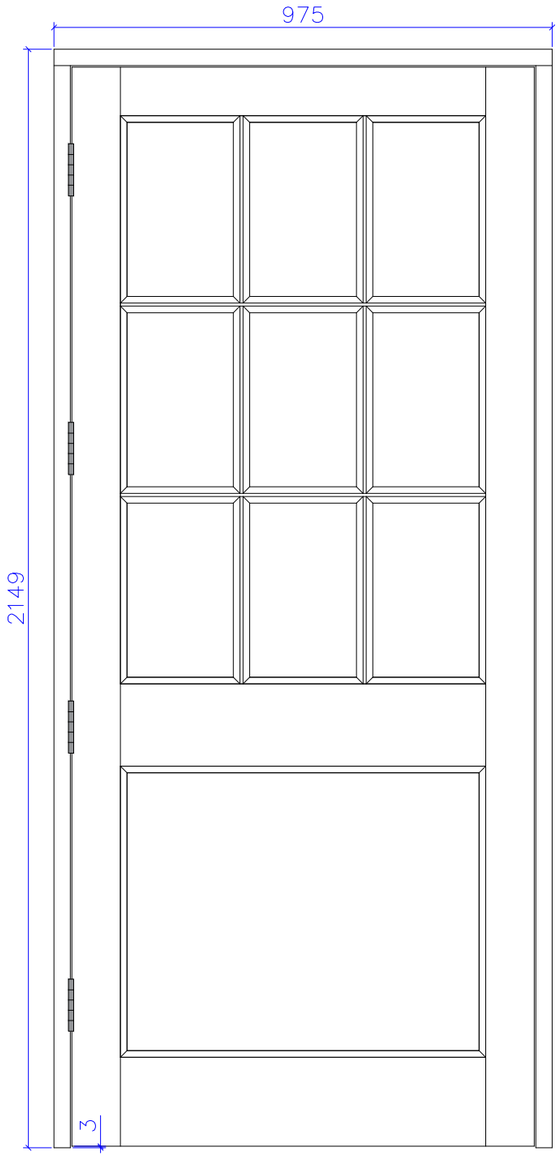


RP04 door type FD30 Internal Face

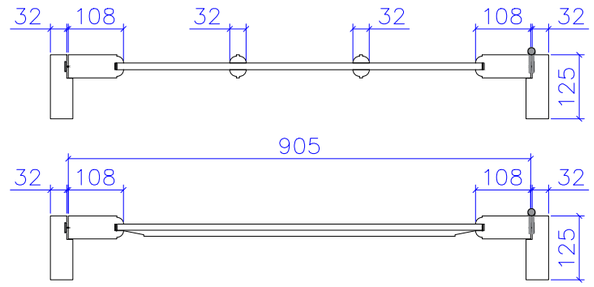


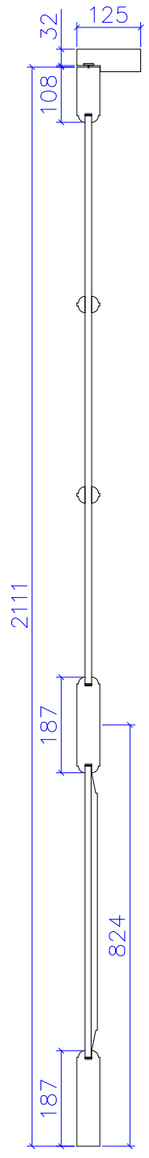


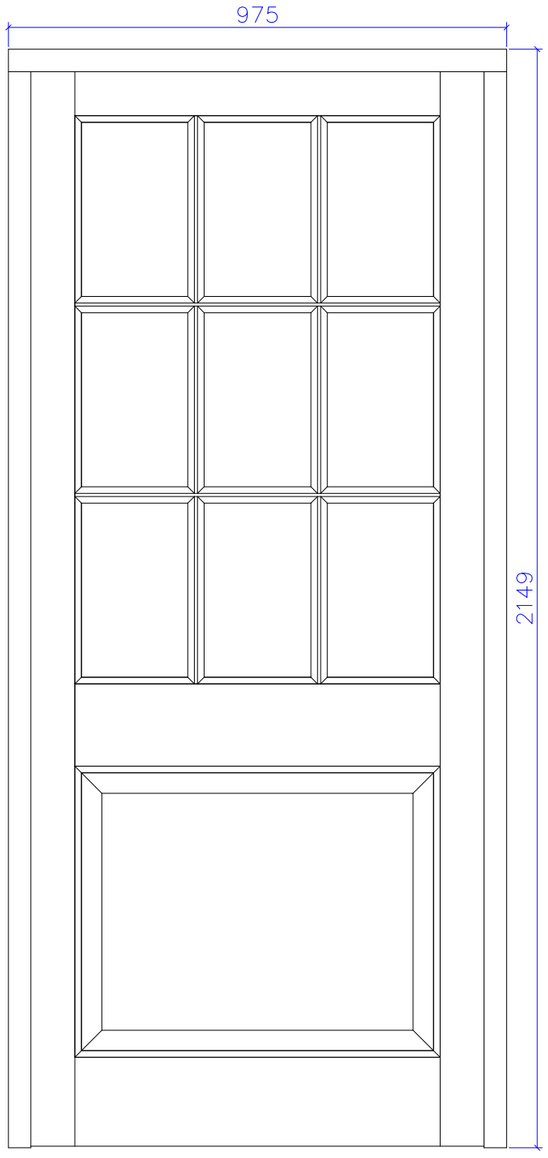


RP04 door type FD30 External Face

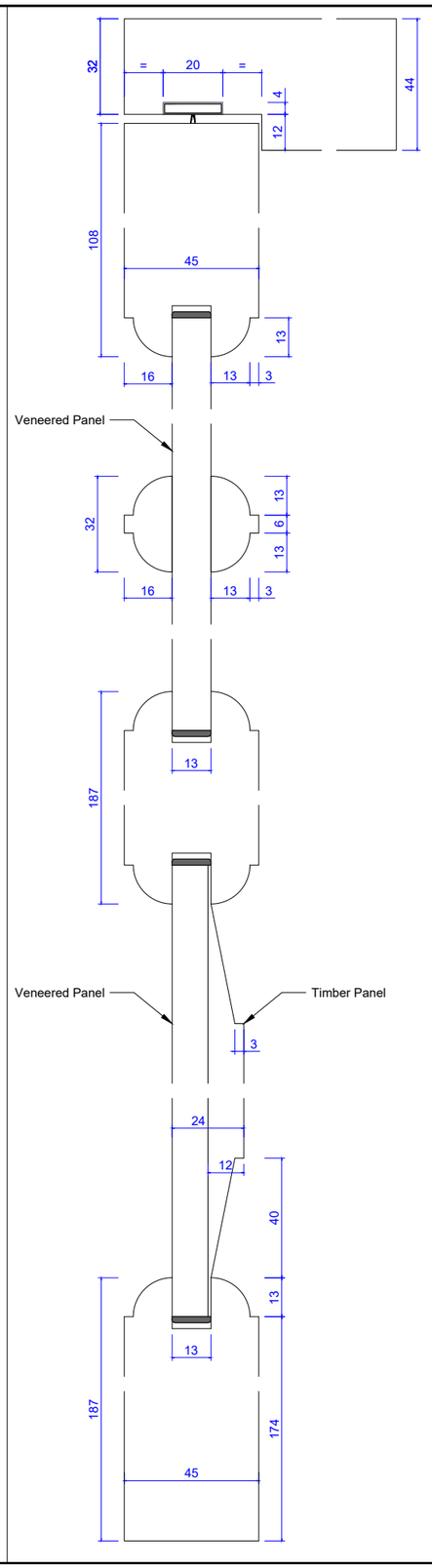


NOTES:
1.


BROWN& CARROLL LONDON

The Brown & Carroll Works
Honywood Road,Basildon,Essex SS14 3DT
T: 01268 243850 F:01268 243851
E: info@brown-carroll.co.uk


| Rev | Changes | Date |
|---|---|---|
| P02 | CHANGED LAYOUT AND INCORPORATED IFC COMMENTS | 05/07/2021 |
| P01 | ADDED RWP01, E01A, E02, E03A, E04, RW01 & INCREASED STILES ON E06 | 28/06/2021 |
| P00 | ISSUED FOR APPROVAL | 28/05/2021 |


Property of Kensington Specialist Joinery Ltd/ Longden Doors


Client
**BROWN & CARROLL**

Site Address
**116213Phs1 CAMDEN TOWN HALL**

Drawing Title
**RP04 Door Type FD30**

Scale
**1:2 & 1:12 @ A3**

Drawn By
**MB**

Date Drawn
**02/07/2021**


LONGDEN
INDIVIDUALLY CRAFTED DOORS
Handmade since 1838
Manufacturing: Unit 5B Bradbury Road, Whinbank Park, Whinbank Road, Aycliffe Industrial, Newton Aycliffe, Co. Durham, DL5 6AY
Commercial: Byron House, 4 Meadowbank Way, Eastwood, Notts, NG16 3SB
www.longdendoors.co.uk


Drawing Status
**APPROVAL DRAWING**

| Job No | Dwg Group | Drawing No | Revision |
|---|---|---|---|
| 2236 | 001 | 407 | P02 |

Document Control Issue No
**CTH-BAC-XXX-DR-39-X-0407**