10mm CLEAR TOUGHENED - RITEC COATING / 20mm BLACK ARGON CAVITY / 6mm CLEAR TOUGHENED LOW-E

POLYESTER POWDER COATED ANTHRACITE GREY RAL 7016 SATIN

ALL BRUSHES AND SILICONE SEALS BLACK

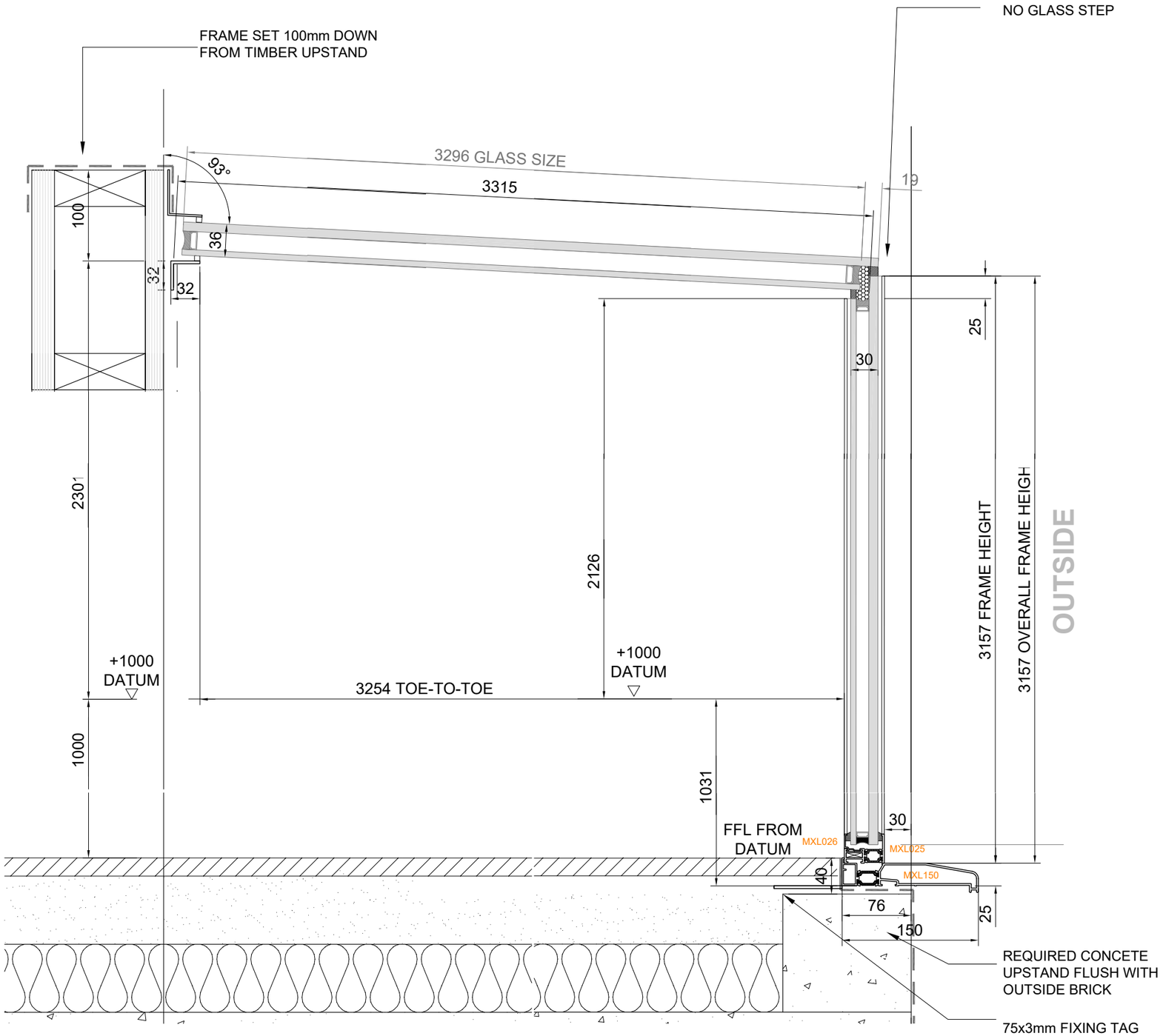

ROOF SECTION

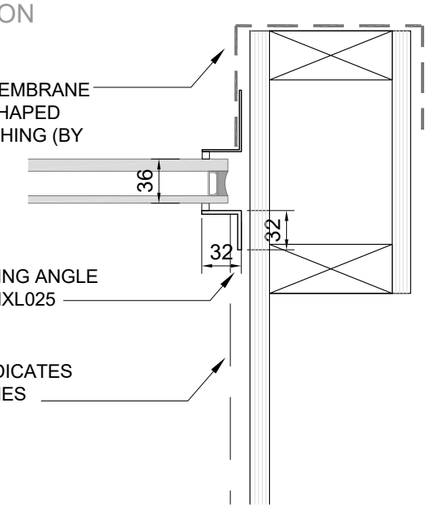

WALL SECTION

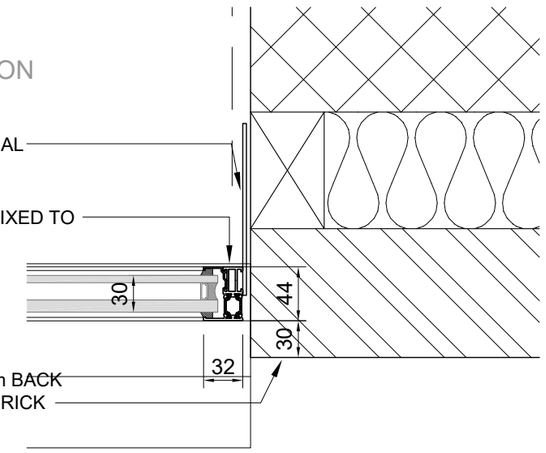

MAXLIGHT

Unit 1, Victoria Industrial Estate
Victoria Road W3 6UU
T: 020 8896 0700
www.maxlight.co.uk

Revision / Date / Comments		
0	11.04.2018	FIRST ISSUE
A	24.04.2018	STEP REMOVED

Project: 131 THURLEIGH ROAD, LONDON, SW12 8TX

GROUND FLOOR REAR

Title: UP AND OVER ROOFLIGHT DETAILS

Drawn by: Cameron Tagg

Survey by: Art Arnett

Site contact: Daniel Grimshaw 079 3288 5776

Scale: 1:5 @ A3

Project ref: 2048

02