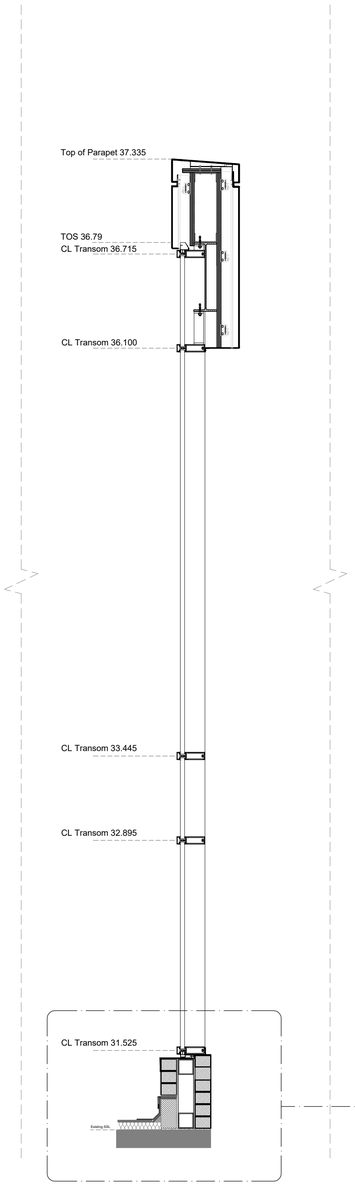

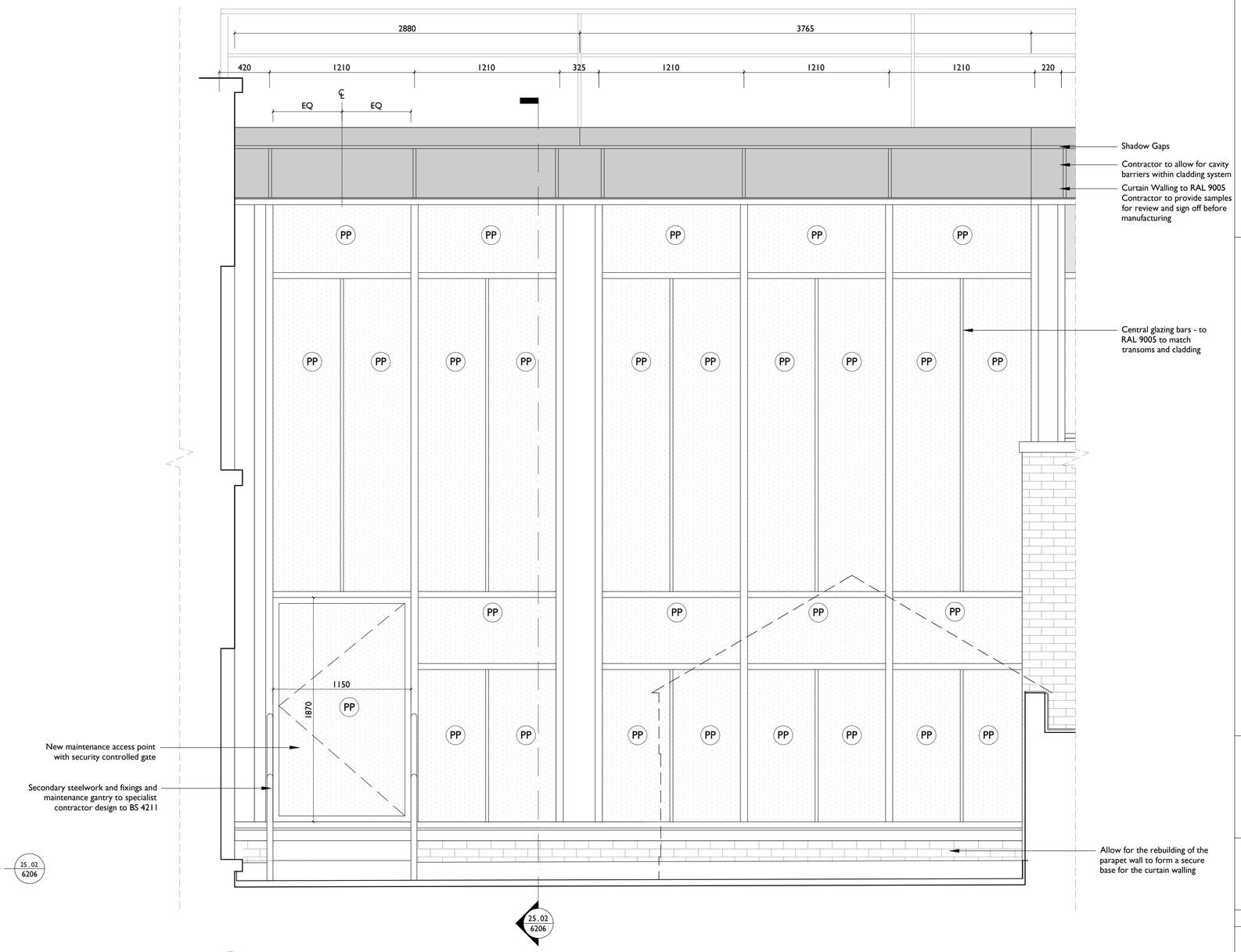

1 / 6203 **CURTAIN WALL SECTION C**
1:20 @ A1

2 / 6203 **CURTAIN WALL ELEVATION**
1:20 @ A1

Notes:

Drawings are based on survey data and may not accurately represent what is physically present.

Do not scale from this drawing. All dimensions are to be verified on site before proceeding with the work.

All dimensions are in millimeters unless noted otherwise.

Purcell shall be notified in writing of any discrepancies.

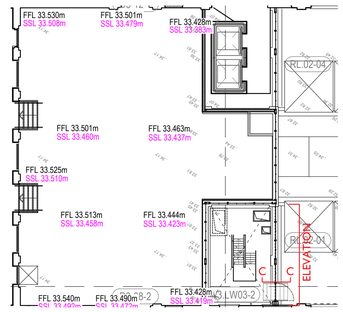

Key

- OG Obscured Glass
- SP Solid Insulated Panel
- VG Vision Glass
- PP Perforated Panel

NOTES:
CURTAIN WALLING AS A CDP ITEM:

FOR CURTAIN WALLING PERFORMANCE/EMPLOYER'S REQUIREMENTS REFER TO AKT SPECIFICATION CTH-AKT-XXX-SP-25-R-001

FOR FINISHES REFER TO NBS CLAUSE H11-110A

1:20 Scale

0 250mm 500mm 750mm 1 m 2 m

ISSUE	DATE	DRAWN	CHECKED	DESCRIPTION
Current	19/10/2020	NS	NS	

DRAWING TITLE	PROPOSED CURTAIN WALLL DETAILS C
DRAWING NO.	CTH-PUR-L03-DR-25-A-6203
REVISION	C00
SIZE & SCALE	A1L 1:20
DRAWING STATUS	A - For Construction
CLIENT	Lendlease
PROJECT	Camden Town Hall
JOB NUMBER	238664

PURCELL

© PURCELL 2012. PURCELL ®IS THE TRADING NAME OF PURCELL MILLER TRITTON LLP