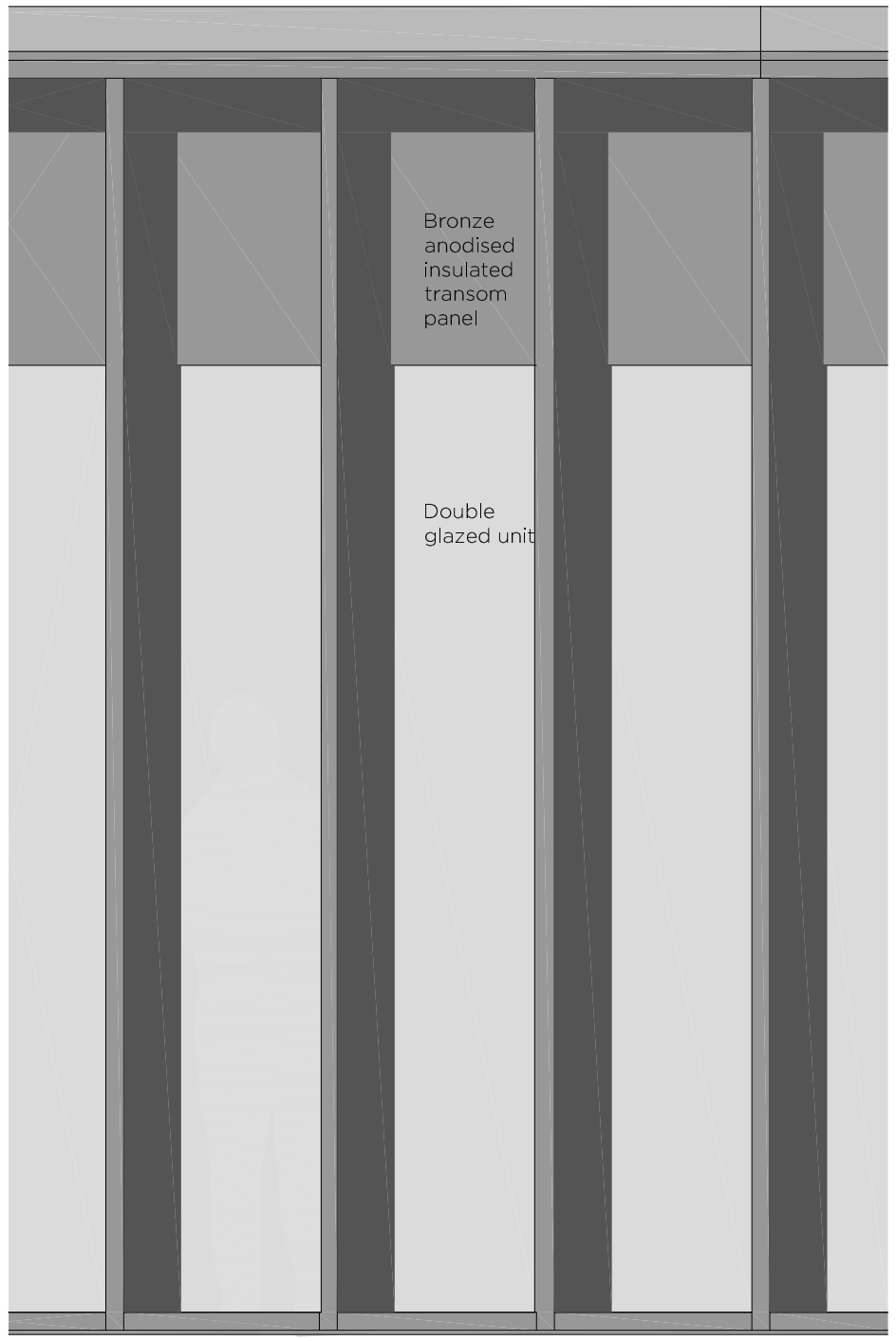

PART ELEVATION

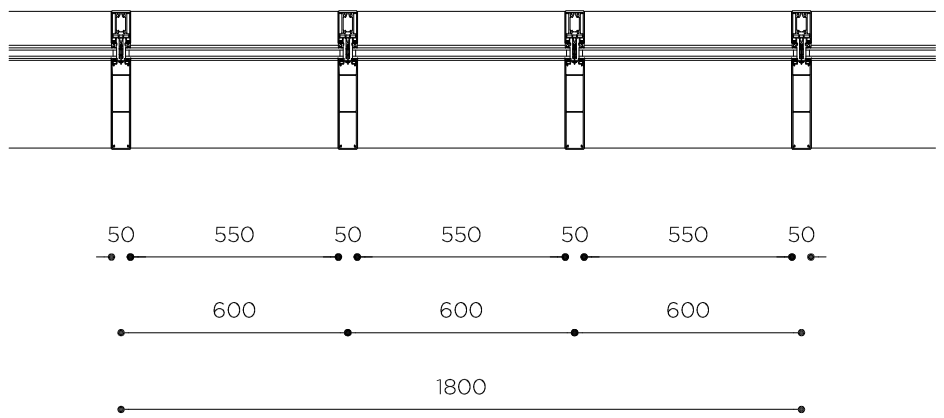

PART PLAN

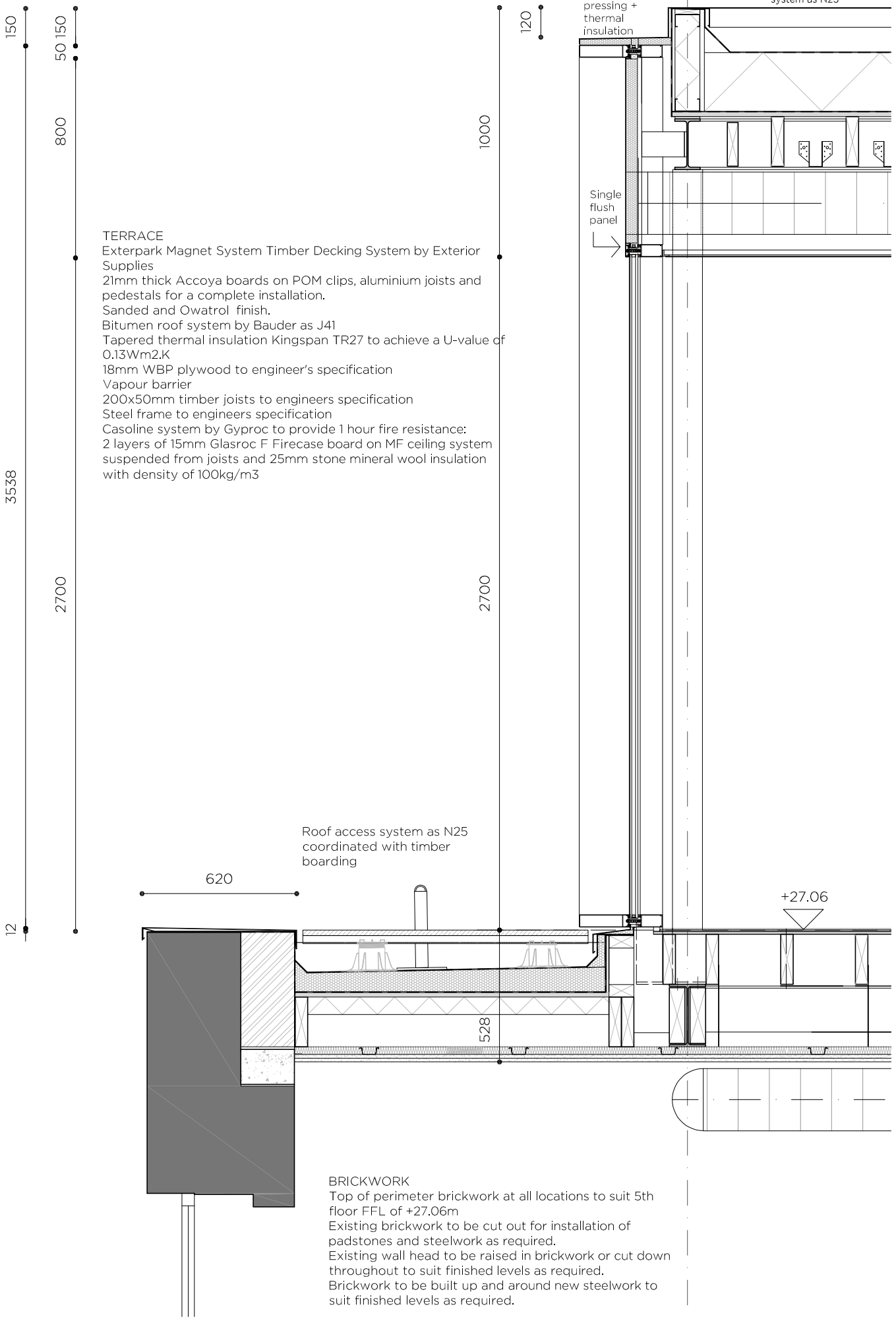

TERRACE
Exterpark Magnet System Timber Decking System by Exterior Supplies
21mm thick Accoya boards on POM clips, aluminium joists and pedestals for a complete installation.
Sanded and Owatrol finish.
Bitumen roof system by Bauder as J41
Tapered thermal insulation Kingspan TR27 to achieve a U-value of 0.13Wm2.K
18mm WBP plywood to engineer's specification
Vapour barrier
200x50mm timber joists to engineers specification
Steel frame to engineers specification
Casoline system by Gyproc to provide 1 hour fire resistance:
2 layers of 15mm Glasroc F Firecase board on MF ceiling system suspended from joists and 25mm stone mineral wool insulation with density of 100kg/m3

BRICKWORK
Top of perimeter brickwork at all locations to suit 5th floor FFL of +27.06m
Existing brickwork to be cut out for installation of padstones and steelwork as required.
Existing wall head to be raised in brickwork or cut down throughout to suit finished levels as required.
Brickwork to be built up and around new steelwork to suit finished levels as required.

PART SECTION

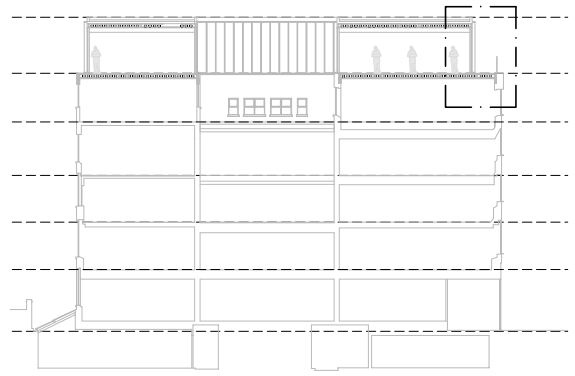

REFERENCE SECTION B

Drawings to be read in junction with specification.
All items to be installed in accordance with manufacturers and suppliers written instructions for a complete installation.
Building air leakage requirement 3.0m3/Hr/m2@50Pa

ROOF
Anodised aluminium coping - finish selected from the Analok range
Upstand formed with steel studs with 12mm plywood each side to engineers spec
Green bitumen roof system XF118 by Bauder with 40mm drainage boards and perimeter retention angle to 100sqm of roof only as Q37.
To other areas - bitumen roof system as J41. Roof access system as N25.
Rigid tapered thermal insulation (effective or average depth 170mm) to achieve a U-value of 0.13Wm2.K
Vapour barrier
18mm wbp plywood to engineer's specification
200x50mm timber joists to engineers specification
Steel frame to engineers specification
300mm clear service void
Mesh suspended ceiling system on grid support system as K40.

WALLS
Contractor designed elements include the curtain walling system and associated aluminium soffit panels
FWS 50 HI curtain walling system by Schuco as H11
Max positive pressure on curtain wall 0.75kN/m2
Max negative pressure on curtain wall 0.90kN/m2
(working mullion depth is 85mm)
U-value 1.3W/m2K
G Value 0.28
LT value 0.60
Neutral clear double glazed units
Anodised aluminium colour bronze to be confirmed by the architect and selected from the Analok range
Cappings to external perimeter to be 200mm deep.
Cappings to interior courtyard to be 150mm deep.
Insulated solid and flush transom panels and U-value min 0.22 W/m2K
All trims, flashings and cladding panels to be anodised aluminium to match the finish to the curtain walling.

FLOOR
12mm plywood sheets to engineer's specification
200x50mm to engineer's specification
Steel frame to engineers specification
Casoline system by Gyproc to provide 1 hour fire resistance:
2 layers of 15mm Glasroc F Firecase board on MF ceiling system suspended from joists and 25mm stone mineral wool insulation with density of 100kg/m3 as K10
300mm clear service void
Mesh suspended ceiling system on grid support system as K40

Issue	Description	Date	Drawn	Check

PLANNING

0 500mm 1m
Scale

ROBIN LEE ARCHITECTURE
71 Queensway
London
W2 4QH
T: 020 3368 6724
E: info@robinleearchitecture.com
W: www.robinleearchitecture.com

Project: STEPHENSON WAY
Project No.: 19008
Client: O&C Management
Date:
Scale / Format: 1:20 / A3
Drawing No.: D200
Drawn / Checked:
Drawing Name: Facade study 1_Front elevation
Issue: PL2