1-38-4972

REPORT

on trees in relation to
26 Brookfield Park, London, NW 5 1ER
for Redbourne Consultants
ref: RC 1855/19
on behalf of Magnet
via: CP Adjusting Ltd
ref: 177521

[redacted]

(27th November 2019)

JOHN CROMAR'S
ARBORICULTURAL
COMPANY LIMITED

[redacted]

John Cromar, Dip. Arb. (RFS), F. Arbor. A.
Registered Consultant of the Arboricultural Association

AA Registered CONSULTANT trees.org.uk

[redacted]

1 Introduction and instructions

This is a tree and building subsidence matter. I am instructed by Redbourne Consultants on behalf of Magnet. I consider my instructions in essence to be to report on the applicability of tree pruning or removal to control a reported subsidence problem at 26 Brookfield Park, London, NW5 1ER. Accordingly, I visited the property on 11th November 2019 in order to carry out an inspection.

2 Report limitations

2.1 Client use

This is a report for the sole use in connection with the above matter only of the client named above and the client's professional advisors. It may be copied and used by the client. Its reproduction or use in whole or in part by anyone else without the written consent of the writer is expressly forbidden. ***The appended schedule of tree work, and the plan, may, without the written consent of the writer, be reproduced to contractors for the sole purpose of tendering.***

2.2 Preliminary nature

This report is preliminary in nature in that further investigations may be identified as necessary in order to reach firm conclusions and/or recommendation(s) for action.

2.3 Not a full safety survey

This is primarily an arboricultural report. Whilst comments relating to matters involving built structures or soil data may appear, any opinion thus expressed should be viewed as qualified, and confirmation from an appropriately qualified professional sought. Such points are usually clearly identified within the body of the report.

This is not a full arboricultural safety survey. This can be supplied but will be subject to a further fee. Where matters of tree condition with a safety implication are noted during an inspection they will of course appear in the report.

2.4 Tree management recommendations

It will be appreciated, and deemed to be accepted by the client, that the formulation of recommendations for the management of trees will be guided by:

1. the need to address reasons for damage;
2. the cost-benefit analysis (cost being in terms of amenity), of tree work that would remove all risk of tree related damage; and
3. the arboricultural considerations—safety, good practice and aesthetics.

2.5 External sources

The client is also deemed to have accepted the limitations placed upon any recommendations by the sources quoted at 3 and 4 below and, especially in view of the inherent uncertainties of climate to accept recommendations in respect of indirect damage as formulated to reduce risk rather than as a guarantee of zero risk. Where sources are limited by externally imposed time or cost restraints this will be identified in the report and may lead to an incomplete quantification of risk. No responsibility can be accepted for the consequences in such a case.

2.6 Re-inspection timescale

Conclusions and recommendations in respect of trees retained on site are valid for a period of three years from the date of inspection, after which a re-inspection is recommended. This is important if new risks such as from trees growing from wind-sown seeds are to be identified, and risks that may be developing as a result of changes to the site, e.g. trees that start to grow at an increased rate due to alterations in immediate environs.

3 Sources and Documents

3.1 Documents supplied

A ground level external inspection was made. Documents supplied and to hand are as follows:

Data	Source
Soil condition report	**Meridian Soils Limited**
Root analysis report	**Richardson's Botanical Identifications**
Consulting engineer	**Redbourne Consultants**
Consulting engineer report type	**Interpretive**
Description of damage	**Redbourne Consultants**
Geotechnical report	**Meridian Soils Limited**
Monitoring records	**RC Crack Monitoring Services**
Loss adjusters	**CP Adjusting Ltd**

3.2 Matters reported by documents

Factor	Trial pit/ borehole	Depth (m)	Comments
Cracking			Dwelling built c. *Edwardian* Extension built c. contemporary two-storey rear addition beyond which there is a more recent single-storey extension Internally on the right-hand flank wall approximately at the point where the more recent extension to the original extension occurs there is cracking for the full height of the wall, external viewing not possible.
Date of onset			Summer 2018
Footings/Soil	TP1/BH1	0.83	Slabs over sand over concrete over made ground overlying clay
P.I. range	All		49-54%
Desiccation	BH1	5.00	Report received states: there appears to be significant desiccation at around 1.5m. (Date of investigation 21.08.2019.) Borehole dry and open on completion. Some slight ground water was noted at 2.5m.

Factor	Trial pit/ borehole	Depth (m)	Comments
Roots			

TP1, u/s footing - R.1		
2 no.	Examined root: most referable to the family LEGUMINOSAE (a group of closely related trees: Robinia (False Acacia), Laburnum, Sophora (Pagoda tree), Gleditsia (Honey Locust), Cercis (Judas tree/Redbud), Albizia (Silk tree), Acacia (Mimosa), as well as such shrubs as Wisteria, Lupins, Gorse and Brooms).	Alive, recently*.
4 no.	Unfortunately all with insufficient cells for identification.	
BH1, 2.0m - R.2		
1 no.	Examined root: also similar in many ways to the family LEGUMINOSAE (as listed above). This was a very IMMATURE sample.	Alive, recently*.

	BH1	To 5.0 0.1-0.5 0.83 2.00	 Fine to medium roots observed Fine and fibrous roots. Slight fine and fibrous roots
Drains			No report received.
Monitoring			Records to hand for period: 14.08.2019 to 08.10.2019.

4 Appraisal

4.1 Mechanism

A consideration of the matter of trees and the subsidence of buildings requires some discussion of the processes involved. *Transpiration* is the process by which water is lost to the atmosphere from living plants. This process demands water uptake from the soil into the roots, from where it passes into the vessels of the plant, and is conducted to various parts of the plant and is finally lost to the plant mainly through pores in the leaves. This process can dry clay soils so that they shrink and allow foundations resting on them to sink or move. (This can be termed 'indirect damage'). There is a higher risk of this happening in very low rainfall periods. The buildings constructed on those footings may then crack. Removal of trees involved in subsidence almost always arrests further cracking, whereafter the previously dried clay will, usually fairly rapidly (i.e. within a season or two) return to its normal proportions by the natural action of rainfall, and consequently will lift the footings back to the position they were in prior to the damage, thus closing or nearly closing the cracks. Redecoration internally is often all that is then required. What may be termed 'direct damage' is caused by physical pressure of parts of a tree, such as roots or trunk, on a structure, and this can occur on any soil type.

4.2 Footings

The footings were not noted to be particularly shallow. On heavily-worked agricultural clay soils, obvious cracking related to drying can open up to a metre or perhaps more in depth during droughts, but this depth of cracking is rarely seen in other circumstances. I therefore consider it more likely that damage by soil drying involved the roots of vegetation. An impermeable cap covered the trial pit location TP1 and this was, naturally enough, adjacent to the footings.

This would have effectively retarded or prevented simple evaporation. It can therefore safely be concluded that a root system would be needed to cause any soil drying below the footings.

4.3 State of borehole

The borehole is reported to have been dry and open on completion, suggesting that drain failure is unlikely to be significant in the damage.

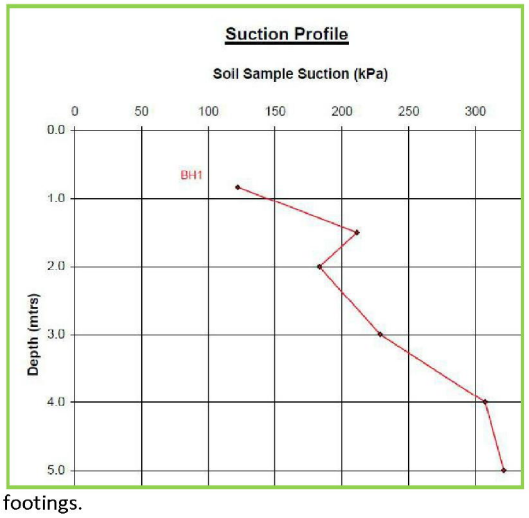

4.4 Filter paper suction test profile

The filter paper suction test profile indicates elevated suctions to a depth of about 1.5m and possibly deeper below ground level. These suction readings tally reasonably well with the reported depth of penetration of fine roots (to about 2m below ground level).

4.5 Root identification

The root identification indicates that vegetation (1) near the property has developed roots close to or under the footings.

4.6

It is reasonable to suspect that other items of vegetation, by reason of their proximity, nature and size, have the capability to affect soil moisture below the footings. Questions therefore arise over how such vegetation could be managed in order to reduce soil drying near the footings.

4.7 Monitoring

Monitoring confirms that cracks have generally opened in summer. The reported time of onset is consistent with soil drying being involved. If crack monitoring confirms a seasonal pattern of damage with cracks opening in summer and closing in winter, or level monitoring show levels falling in summer and rising in winter, it can safely be concluded that vegetation is involved in the damage.

4.8 Pruning

Pruning to trees to reduce soil drying near buildings is generally unreliable unless repeated frequently. It is most likely to be effective when there is considerable separation between the affected building and the tree. This is not the case here. A *very regular* pruning regime to trees near buildings *over an extended time and at close intervals* may reduce both the likelihood of damage and limit the scale of damage if it does occur. *Gleditsia* trees in this part of the country are usually of high vitality, able to regenerate new leaves very quickly and in considerable density and numbers.

This means that although transpiration will be reduced temporarily by a *severe* pruning, it will very rapidly recover as new leaves grow, which can in summer be a matter of a very few weeks. Research has demonstrated that a 50% loss of leaf does not reduce the water uptake by as much as 50% as remaining leaves generally transpire greater amounts than previously. A single heavy pruning will not succeed in my view in remedying the situation reliably. Sometimes a single pruning may be followed by a period of normal or wet weather, which may allow more credit to be given to the pruning as having effected a 'cure' than is strictly due. 'Hortlink' project 212 'Controlling Water Use of Trees to Alleviate Subsidence Risk' (2004) established that the reduction in water use following heavy pruning of trees is lost after two seasons.

4.9 Tree removal

In this case I consider that removal of tree **1** will be necessary in order to reliably control soil drying. Recommendations for vegetation management are as outlined in section 6 below.

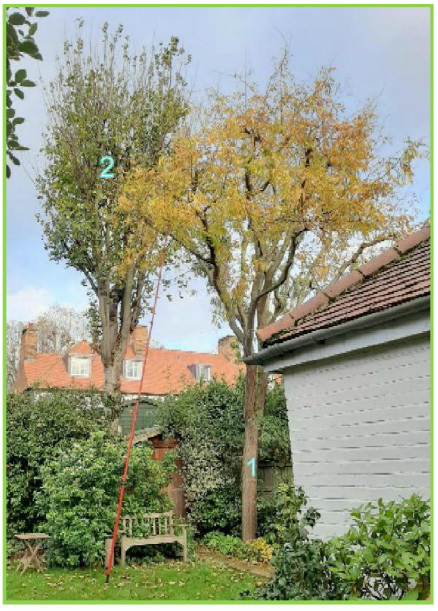

4.10 Heave

Tree 1 certainly does not pre-date the structure. The tree is about 25 years old. Heave, as far as tree/building relationships are concerned, is the (usually upward) movement of structures founded on clay soils, this becoming of general relevance when damage also occurs, when clay soil absorbs moisture after it has been desiccated, often by tree roots. Such desiccation can cause problems if trees that have caused the desiccation are removed, as swelling of the subsoil can occur, forcing some structures upward. Heave can only occur in certain fairly precise circumstances. For there to be even a potential for heave, an adjacent building (in whole or in part) must at least postdate the tree or have been previously distorted by the action of the tree, then patched and repaired, perhaps over many years, and there must be a significant persistent moisture deficit in a shrinkable soil below the property. Heave consequent to tree removal is not considered a significant threat in this case

4.11

The amenity provided by trees is often of general public benefit. The location appears reasonably favourable for a suitable tree: if the tree is removed I suggest that consideration is given to planting one or more of a species with a good track record as far as lack of involvement in building damage is concerned, such as *Amelanchier arborea* 'Robin Hill', *Hoheria sexstylosa* 'Stardust', *Carpinus betulus* 'Frans Fontaine', or *Magnolia grandiflora*, at least 8m from the structure.

4.12 Root barrier

A root barrier has been considered and rejected as inapplicable owing to potential for tree damage, etc.

4.13 Statutory constraints

Camden's web site has informed me that the property is in a Conservation Area ; trees listed below in 6 are not scheduled in a Tree Preservation Order.

As Conservation Area restrictions do apply a formal notification of intent should be given to the local planning authority and the notification period allowed to expire, before carrying out work to any such protected trees.

5 Conclusions

Prospects for control by vegetation management are good if vegetation is confirmed as involved and if vegetation considered significant can be removed: much less certain if pruning alone is relied upon.

Further information is needed via crack monitoring in order both to confirm causation and to determine the response of the building to any initial tree control measures.

6 Recommendations/ Summary

6.1 Tree Data

Please read with plan 1-38-4972/P. All dimensions are approximate and are in metres/millimetres.

Tree number	Tree type	Height	Stem diameters	Proximity	Comments	Now	Repeat (Y/N +any repeat in years)	Reason	Cost
1	*Gleditsia triacanthos*	11	270	4.8	Remove, grind stump to below ground level.	Y	N	Suspect	475
2	sycamore	15	460	10	No access. Once pollarded to around 6m in height but last about 30 years ago since then has been variously reduced in height and, shredded, that is lower branches removed and is now etiolated. Recommend reduced to 9m in height biannually	Y	2	Precaution	500
3	*Pittosporum*	4	130, 150	3.9	Shrub				
4	ash	10	500, 300	11	Estimated; no access. In 2019 has been heavily reduced in height, thinned rather amateurishly but nonetheless will have reduced overall crown area. Recommend tree maintained at around 11m in height and 10m in spread biannually.	N	2	Precaution	325

Proximity is the distance from the specified property or structure.

Cost is solely a guide to industry charges; it is neither a quote nor an estimate.

6.2 Tree work standards

Any tree work should be carried out to BS 3998:2010 'Tree work—Recommendations'.

7 General

All trees growing close to life and property require regular inspection and sometimes maintenance to minimise conflict between the arboreal and human spheres of existence. This should be carried out yearly by a properly qualified arboriculturist, such as a Fellow of the Arboricultural Association, or registered consultant of that body.

8 Bibliography

Biddle (1998) Tree Root Damage to Buildings' Vol.1

Biddle (1998) 'Patterns of soil drying on clay in proximity to trees on clay soils.'

Cutler, & Gasson (1998) 'Can we live with trees in our towns and cities?'

Arboricultural Journal, 22(1).

Cutler, & Richardson (1989) *Tree Roots and Buildings*.

9 Signature

Date of completion: 27th November 2019

Signed:

[redacted]

John C. M. Cromar, Dip. Arb. (RFS), F. Arbor. A., RCArborA

on behalf of John Cromar's Arboricultural Company Limited.

10 Schedule - 26 Brookfield Park, London, NW 5 1ER

Please read in conjunction with appended plan ref: 1-38-4972/P

Please note that this a provisional schedule of works considered necessary if vegetation control alone is adopted as a remedial measure. Trees outside the curtilage of the property are included.

As applicable, the consent to, or acquiescence to, and communication of the timing of the recommended remedial works, as far as the relevant owner(s) is / are concerned, should be checked before any such trees are actually treated.

Tree number	Tree type	Height	Stem diameters	Proximity	Comments
1	*Gleditsia triacanthos*	11	270	4.8	Remove, grind stump to below ground level.
2	sycamore	15	460	10	Reduce to 9m in height.
4	ash	10	500, 300	11	Reduce to 11m in height and 10m in spread.

NOTES:

All tree work should be carried out to BS 3998 : 2010 'Tree Work – Recommendations'. The Wildlife and Countryside Act 1981 protects with certain exceptions all birds and their nests. It is an offence to destroy such nests or take or injure such birds in the course of tree works operations. If a tree is a bat-roost, a licence to work on the tree must first be obtained from the relevant Statutory Nature Conservation Organization (in England : Natural England 0845 601 4523.) Acting without a licence is likely to be justifiable only in acute emergencies threatening human life and where all other legally available option such as footpath diversion, fencing and warning signs cannot be applied.

KEY TO PLAN SYMBOLS USED	
⊠	Trial Pit / Borehole location
⩘	Crack (MC = monitored crack)

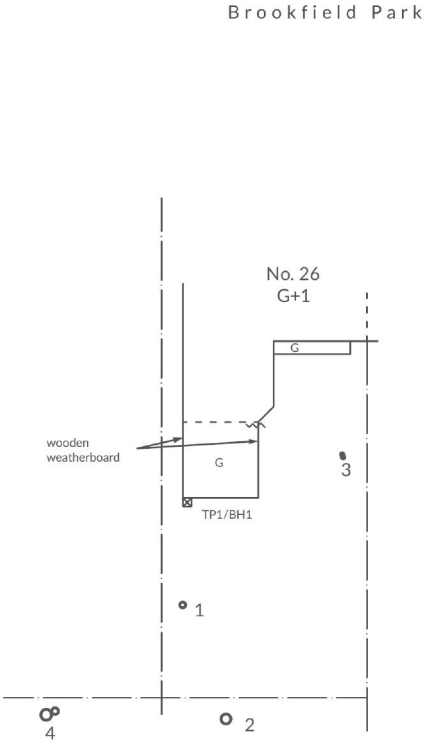

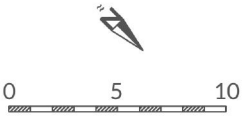

Plan drawn to approx. scale 1:250 @A4

Trees in relation to 26 Brookfield Park, London, NW5 1ER
1-38-4972/P

JOHN CROMAR'S
ARBORICULTURAL
COMPANY LIMITED