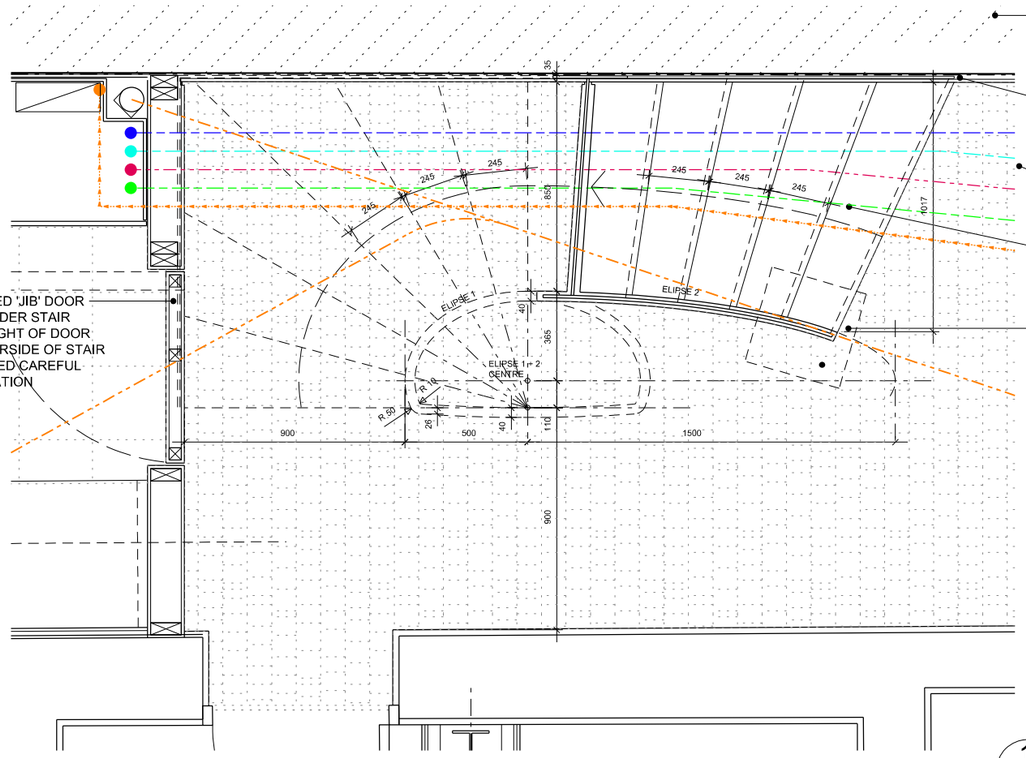

1 DD040 LOWER GROUND

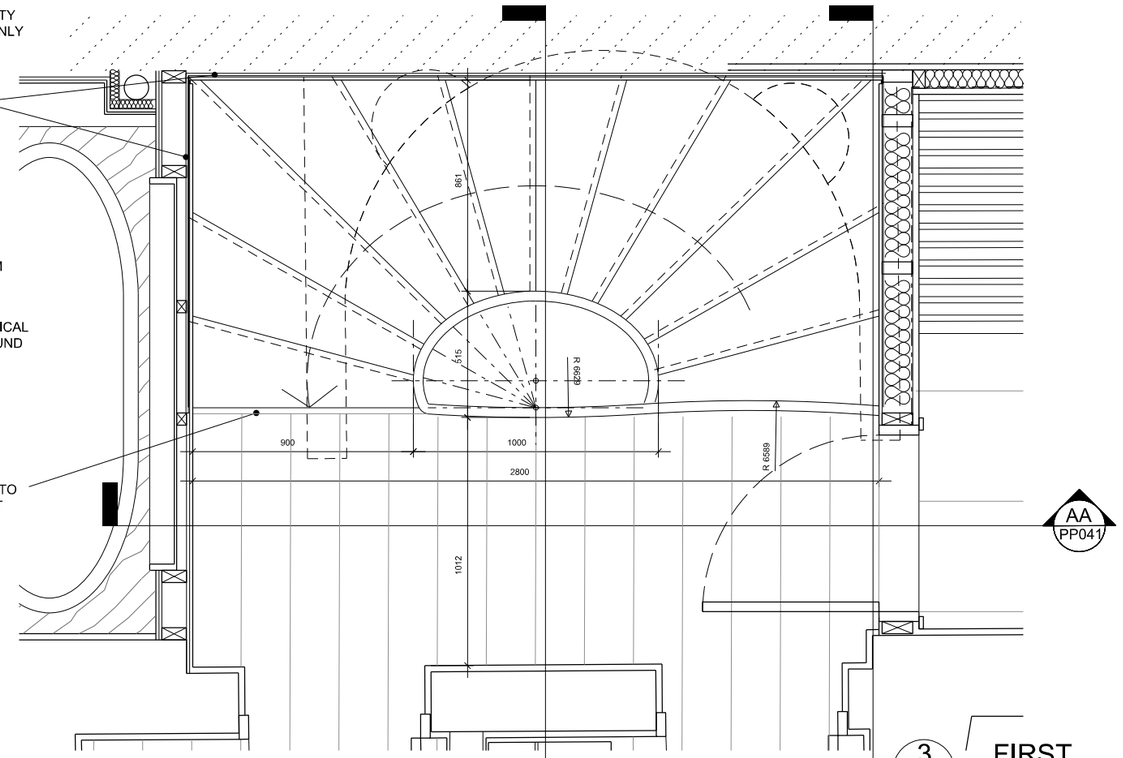

3 DD040 FIRST FLOOR

XX PP042

YY PP042

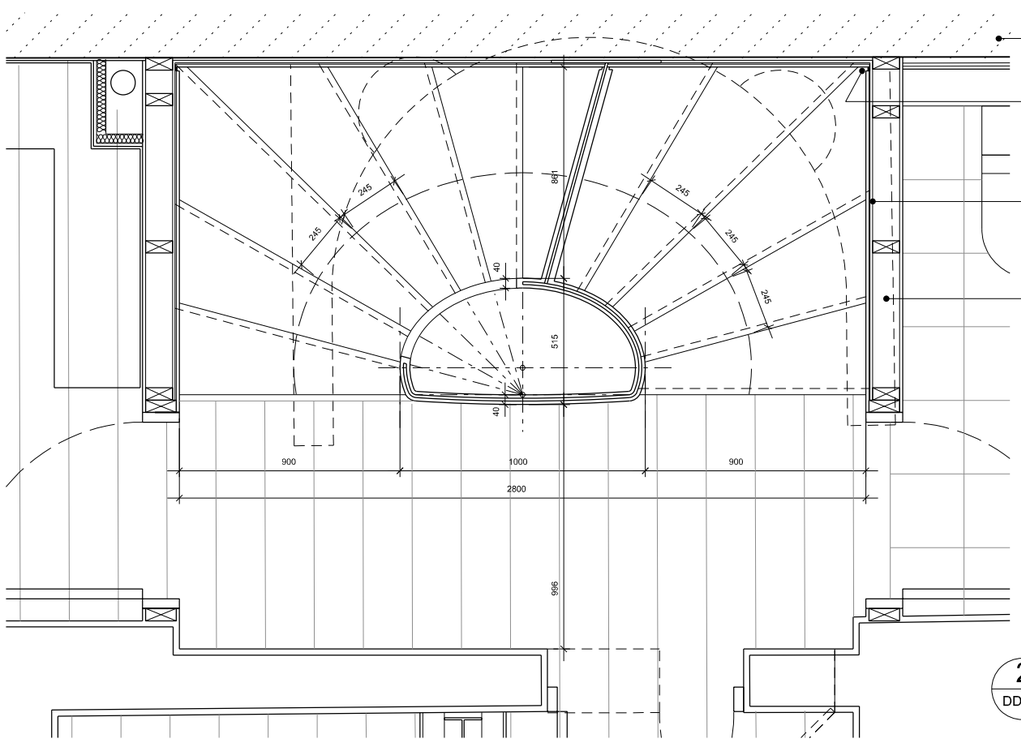

2 DD040 UPPER GROUND

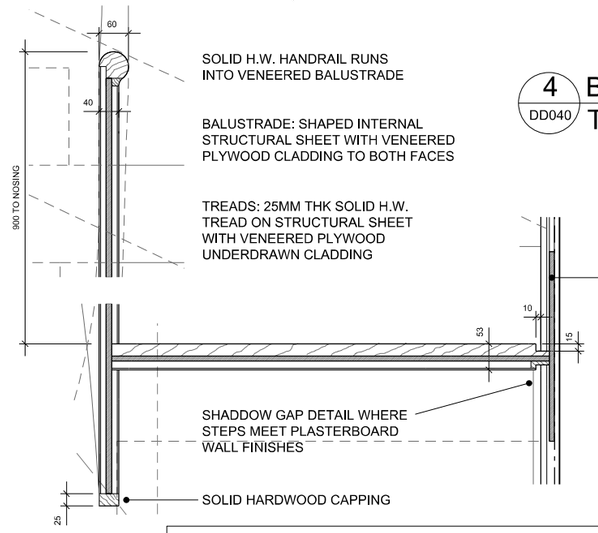

4 DD040 BALUSTRADE + TREAD DETAIL

STAIR - DRAWING INDICATIVE ONLY

STAIR IS ILLUSTRATED AS STEEL SHEET CONSTRUCTION CLAD WITH SOLID H.W. AND H.W. VENEERED PLYWOD FINISHES.

NOTE THAT THE STAIR MAY BE CONSIDERED USING ALL PLYWOOD AND SOLID HARDWOOD CONSTRUCTION SUBJECT TO STAIR MANUFACTURER ASUMING ALL DESIGN LIABILITY

ALL DIMENSIONS TO BE CHECKED BY SPECIALIST SUBCONTRACTOR ON SITE BEFORE MANUFACTURE SPECIALIST SUB-CONTRACTOR TO BE RESPONSIBL FOR ALL STEELWORK CONNECTIONS, SIZING AND DETAIL DESIGN - THE WHOLE TO COMPLY FULLY WITH BUILDING REGULATIONS AND OTHER RELAVENT LEGISLATION

D L A

DAVID LONG ARCHITECTS LTD

Architecture and Development Management

Fordhams, Littley Green, Chelmsford, Essex, CM3 1BU

Tel +44(0) 208 533 5555 / 07478 722554

e-mail dlong@dlaltd.com

www.dlaltd.com

NOTES:

1. DO NOT SCALE
2. ALL DIMENSIONS ARE IN METERS OR MILLIMETERS UNLESS NOTED OTHERWISE
3. ALL DISCREPANCIES TO BE NOTIFIED TO THE ARCHITECT IMMEDIATELY
4. ALL CONSTRUCTION WORK TO COMPLY WITH LOCAL AUTHORITY CODES AND BUILDING REGULATIONS, BRITISH STANDARDS AND OTHER REGULATIONS APPLICABLE TO BOTH DESIGN AND EXECUTION OF THE WORK.

CLIENT: Elizabeth Birch

STRUCTURAL ENGINEERS:

BUILDING SERVICE ENGINEERS:

QUANTITY SURVEYOR:

PLANNING SUPERVISOR:

ISSUE RECORD

Rev.	Date	Comment	by	ch
-	14.11.19	PRELIMINARY ISSUE	DL	
A	07.02.20	GENERAL AMENDMENTS	DL	
B	08.04.20	GROUND FLOOR TERMINATION AMENDED DIMS AND DETAILS ADDED	DL	

PROJECT: 99 South End Road LONDON NW3 2RJ

STATUS: DETAIL DESIGN

TITLE: NEW STAIR

PLANS

SCALE:	DRAWING No:	REVISION:	ORIGINAL PAPER SIZE:
1:25	DD-040	B	A3

JOB NO: 177