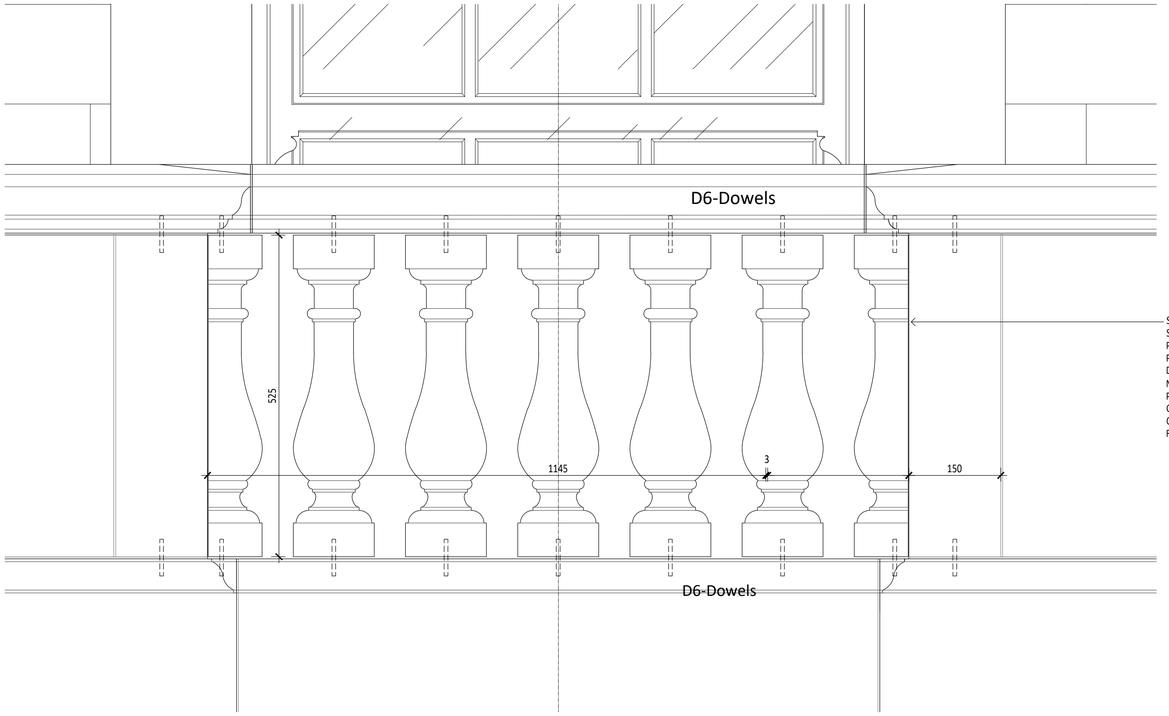

SPECIFICATION:
STONE SLABS TO BS EN 1469:
PETROGRAPHIC NAME TO BS EN 12407:
PORTLAND LIMESTONE- BROADCROFT WHITBED.
DENOMINATION TO BS EN 12440:
NAME (TRADITIONAL): PORTLAND STONE.
PETROLOGICAL FAMILY: LIMESTONE.
COLOUR: BUFF.
ORIGIN: PORTLAND, DORSET, UK.
FINISH: TO MATCH APPROVED SAMPLE.

01 - TYPICAL BOTTLE STONE ELEVATION
1:5 @ A1 & 1:10 @ A3

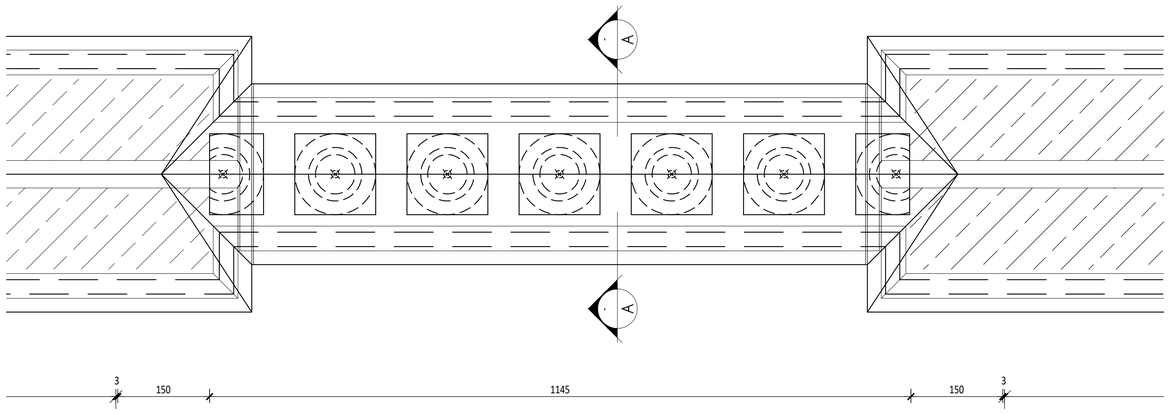

02 - TYPICAL BOTTLE STONE PLAN
1:5 @ A1 & 1:10 @ A3

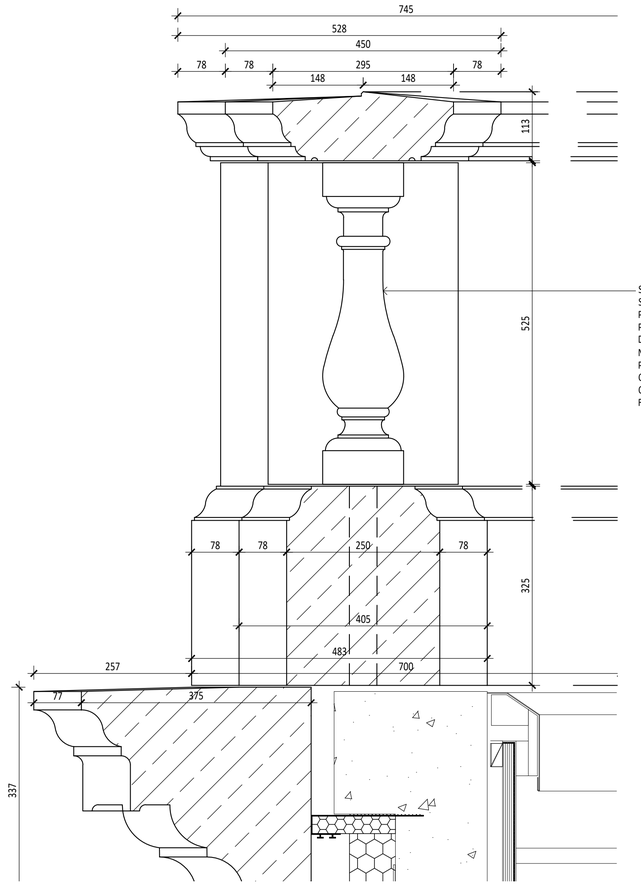

SPECIFICATION:
STONE SLABS TO BS EN 1469:
PETROGRAPHIC NAME TO BS EN 12407:
PORTLAND LIMESTONE- BROADCROFT WHITBED.
DENOMINATION TO BS EN 12440:
NAME (TRADITIONAL): PORTLAND STONE.
PETROLOGICAL FAMILY: LIMESTONE.
COLOUR: BUFF.
ORIGIN: PORTLAND, DORSET, UK.
FINISH: TO MATCH APPROVED SAMPLE.

03 - TYPICAL BOTTLE STONE SECTION A
1:5 @ A1 & 1:10 @ A3

04 - BOTTLE STONE PLAN CONTEXT ELEVATION
1:100 @ A1

This Is A Cad Drawing
UNDER NO CIRCUMSTATNCES SHALL MANUAL ALTERATIONS BE MADE. ANY DISCREPENCY FOUND BETWEEN THIS DRAWING AND ANY OTHER DOCUMENT SHOULD BE REFERRED IMMEDIATELY TO THE ARCHITECT. NO DIMENSIONS ARE TO BE SCALED FROM THIS DRAWING

Copyright is Reserved
COPYING OR REPRODUCTION OF THIS DRAWING WITHOUT THE WRITTEN PERMISSION OF STUDIO INDIGO IS NOT PERMITTED

Disclaimer
THE HARD COPY ACCOMPANYING THE ELECTRONIC DATA IS LEGAL TRANSMISSION OF INFORMATION THE ELECTRONIC ARE ISSUED ONLY FOR CONVENIENCE OF USE. NO RESPONSIBILITY FOR THE ACCURACY OR FOR ANY CONSEQUENCE RESULTING FROM THE USE OR ALTERATION OF INFORMATION IS ACCEPTED.

ISSUED FOR PLANNING

Notes

SPECIFICATION:
STONE SLABS TO BS EN 1469:
PETROGRAPHIC NAME TO BS EN 12407:
PORTLAND LIMESTONE- BROADCROFT WHITBED.
DENOMINATION TO BS EN 12440:
NAME (TRADITIONAL): PORTLAND STONE.
PETROLOGICAL FAMILY: LIMESTONE.
COLOUR: BUFF.
ORIGIN: PORTLAND, DORSET, UK.
FINISH: TO MATCH APPROVED SAMPLE.

Rev	Date	Issuer	Notes
P1	29.04.20	SD	ISSUED FOR PLANNING DISCHARGE

Client
PRIVATE CLIENT

Address
73-75 AVENUE ROAD, LONDON, NW8 6JD

Drawing Title
TYPICAL BOTTLE STONE DETAILS

Date
APRIL 2020

Dwg By
SD

Scale
1:5 @ A1 & 1:10 @ A3

Studio Indigo Ltd
ARCHITECTS & INTERIOR DESIGNERS

Unit 37 Chelsea Wharf I 15 Lots Road I London I SW10 0QJ
T 020 7349 1290 I F 020 7349 1291 I www.studioindigo.co.uk
Registered Office I 37 Warren Street I London I W1T 6AD
Registered in England and Wales I Ltd no: 06005991

Project Number	Drawing Number	Revision
3680	C1-326	P1