0 0.5 1.0 1.5 2.0 2.5m

Scale 1:50

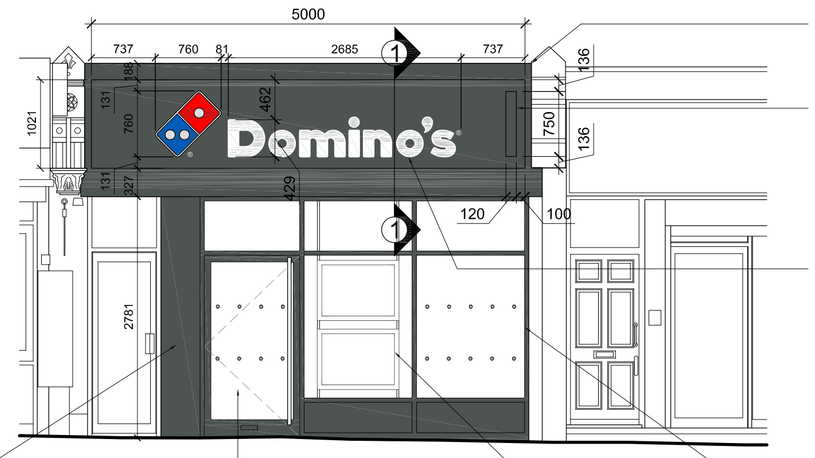

Existing fascia surround (painted red) to be made good and redecorated in RAL 7043 Traffic Grey to match shopfront

1no. Proposed new internally illuminated L.E.D projecting sign (750mm x 750mm square profile) to be installed to RHS of fascia in same location as existing

1no. Proposed internally illuminated fascia sign to consist of individual built up letters and logo with internal L.E.D illumination. Signage to be mounted on PPC Aluminium backing, finished in RAL 7043 Traffic Grey.

Existing pier to LHS of shopfront to be overclad with new PPC Aluminium panel in RAL 7043 Traffic Grey to match shopfront.

Proposed new customer entrance to provide level access with new door to be installed in RAL 7043 Traffic Grey to match shopfront. Door to provide minimum effective clear opening width of 1050mm and both sides to be fitted with full height tubular PPC pull handles in RAL 9010 White.

New A1 Window display poster-board to be installed central to shopfront glazing panel

Proposed new PPC aluminium shopfront in RAL 7043 Traffic Grey to be installed with shopfront stall riser set 400mm above internal FFL and new transom bar to align with head of entrance door

Proposed Elevation A

Scale 1:50

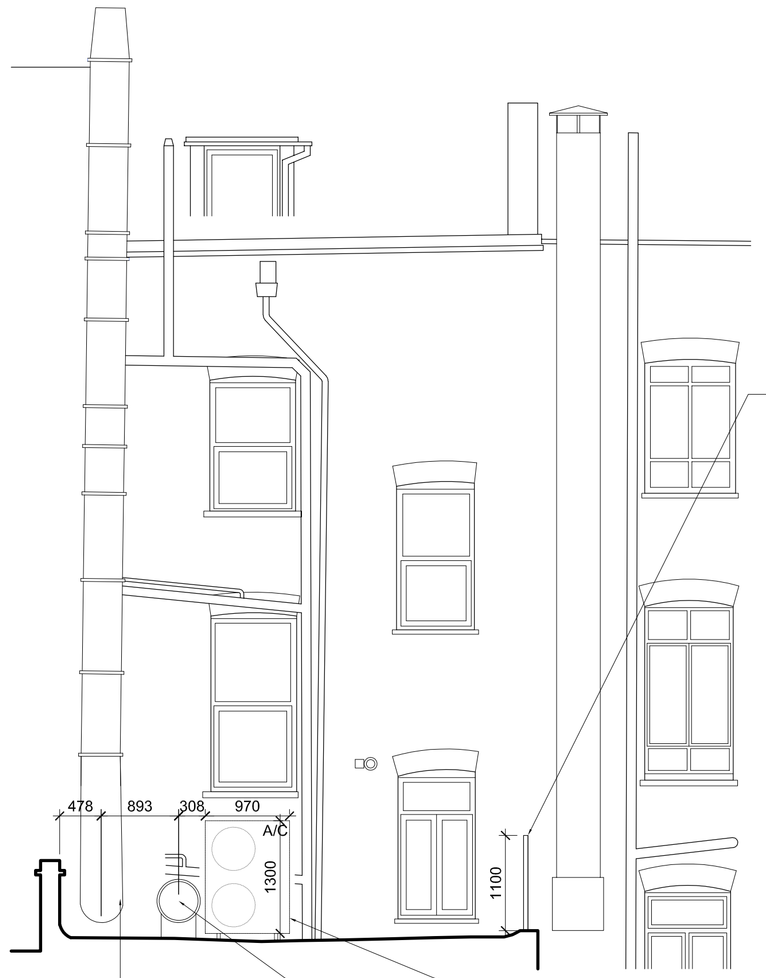

Existing section of extract duct flue penetrating rear wall to be retained with new ducting (internal and external) to tie in to M&E specialist sub-contractor's design and detail. New 500mm external extract duct to replicate the route of the existing duct and terminate min. 1m above roof level in new flue with weatherproof cowl. Oven extract system to be fitted with fine filtration and carbon filters in accordance with AVE Documents Q1430 Annex B and Q1430 Odour Risk Assessment. Refer to reports for oven extract system odour abatement details and specification. Fan silencer and noise attenuation dampers to be installed in oven extract system with extract fan fixed via anti-vibration mounts to M&E specialist sub-contractor design and details.

Proposed 400mm dia. Fresh air intake duct to run internally at high level before penetrating flat roof through existing access hatch (with new weather proof covering) before turning horizontally 90° and terminating in new intake vent with mesh covering. Fan silencer and noise attenuation dampers to be installed in fresh air intake system, with AHU fixed on anti-vibration mounts to M&E specialist sub-contractor design and details.

1no. new A/C and 1no. Cold Room compressors to be installed on flat roof via 'Big Foot' support systems (or equivalent). Structural engineer to confirm sufficiency of roof build-up to support new compressors and supports

Proposed Elevation B

Scale 1:50

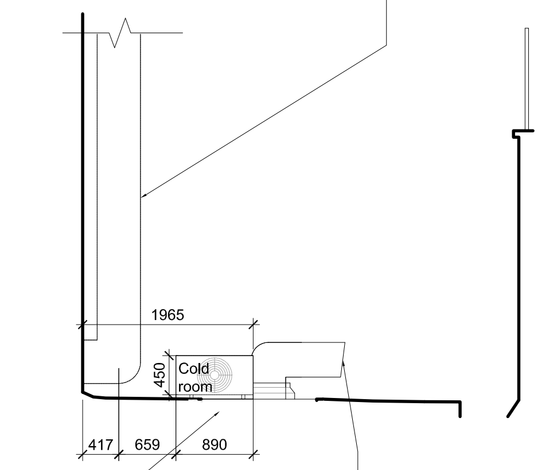

1no. new A/C and 1no. Cold Room compressors to be installed on flat roof via 'Big Foot' support systems (or equivalent). Structural engineer to confirm sufficiency of roof build-up to support new compressors and supports

Proposed 400mm dia. Fresh air intake duct to run internally at high level before penetrating flat roof through existing access hatch (with new weather proof covering) before turning horizontally 90° and terminating in new intake vent with mesh covering. Fan silencer and noise attenuation dampers to be installed in fresh air intake system, with AHU fixed on anti-vibration mounts to M&E specialist sub-contractor design and details.

Proposed Elevation C

Scale 1:50

PROPOSED SHOPFRONT ELEVATIONS

- This drawing is based on Greenhatch Survey Solutions drawing no. 19803-183_01_PES (dated 28/10/2019).
- All drawings to be read in conjunction with the latest DPG "Project star shop fitting manual".
- All drawings to be read in conjunction with full shop fitting package of information.

SHOPFRONT

Proposed new PPC aluminium shopfront in RAL 7043 Traffic Grey to be installed with shopfront stall riser set 400mm above internal FFL.

Proposed new customer entrance to provide level access with new door to be installed in RAL 7043 Traffic Grey to match shopfront. Door to provide minimum effective clear opening width of 1050mm and both sides to be fitted with full height tubular PPC pull handles in RAL 9010 White.

Existing brick pier to LHS of shopfront to be overclad with new PPC Aluminium panel in RAL 7043 Traffic Grey to match shopfront

All manually operated doors to have an opening force at the leading edge which is not more than 30N from 0° (the door in the closed position) to 30° open, and not more than 22.5N from 30° to 60° of the opening cycle.

All shop front glazing to comply with BS 952, BS 6262 (Code of Practice for Glazing in Buildings), CP152, Approved Document N and BS6206:1981 and subsequent revisions. Glazing to shop front to be LAMINATED (NOT toughened) safety glass, minimum Class B rated to BS6206:1981 in doors or door side panels over 900mm wide, Class C elsewhere, impact resistant from both sides.

MANIFESTATION

All glazing manifestation to comply with Approved Document K 2013, Circular, translucent grey, computer-cut, frosted vinyl decals to have 40mm diameter and be placed at 250mm centres. To be applied internally in two rows to run at heights of 850mm - 1000mm and 1400mm - 1600mm AFFL.

Windows to driver access door to be filmed internally for security / privacy where shown on the drawing.

Proposed Shopfront Elevations

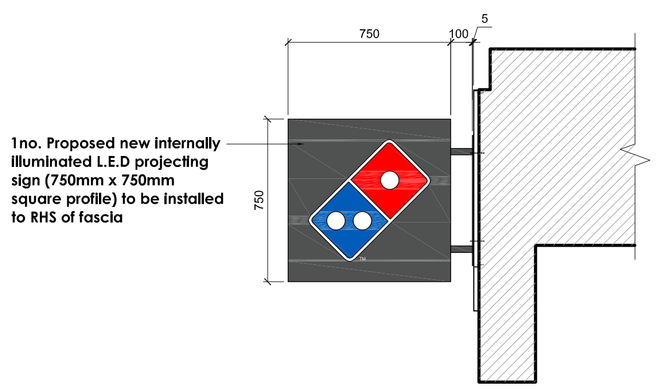

1no. Proposed new internally illuminated L.E.D projecting sign (750mm x 750mm square profile) to be installed to RHS of fascia

Projecting Sign Elevation D

Scale 1:20

Proposed Signage Schedule				
Type	Description	Illumination	Size	Quantity
Fascia Letters	Individual built up letters	Internally illuminated Max 200cd/m²	Refer to elevation for dimensions	1no.
Fascia Tile Logo	Individual built up logo	Internally illuminated Max 200cd/m²	Refer to elevation for dimensions	1no.

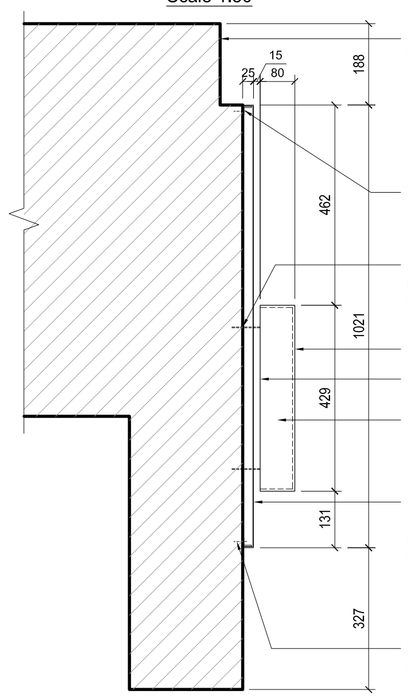

Existing fascia surround (painted red) to be made good and redecorated in RAL 7043 Traffic Grey to match shopfront

23mm x 100mm aluminium angles

All fixings and power distribution to be fully concealed - to manufacturer's design and details

5mm thick opal 050 acrylic faces

10mm thick white foamex backtray

Individual built-up letters and tile logo in aluminium with 80mm returns all round

2mm folded aluminium tray PPC finish in RAL 7043 Traffic Grey (satin finish) formed with 35mm folded returns on all four sides, with 23 x 100mm internal aluminium fixing angle to top and bottom

Site specific secure galvanised wall fixings

Fascia Section Detail 1-1

Scale 1:10

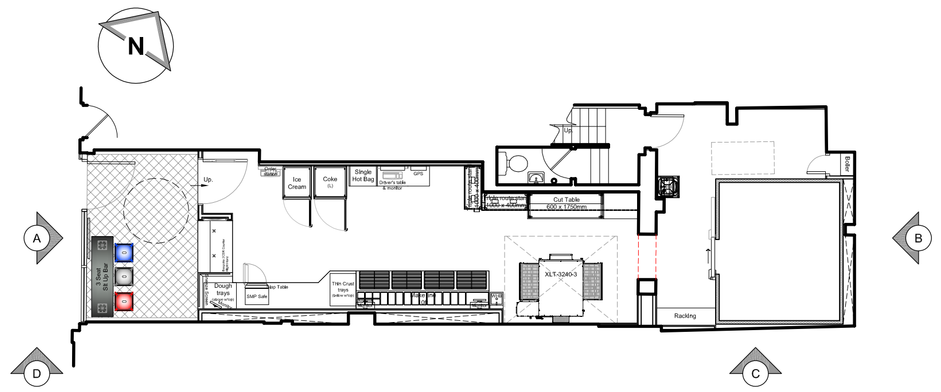

Key Plan

Not to Scale

NOTES AEWTP039

- All dimensions and levels are to be checked on site.
- Any discrepancies are to be reported to the architect before any work commences.
- This drawing shall not be scaled to ascertain any dimensions. Work to figured dims only.
- This drawing shall not be reproduced without express written permission from AEW.
- Title overlay drawings and ownership boundaries are produced using all reasonable endeavours. AEW cannot be responsible for the accuracy or scale discrepancy of base plans supplied to them.
- All works are to be undertaken in accordance with Building Regulations and the latest British Standards.
- All proprietary materials and products are to be used strictly in accordance with the manufacturers recommendations.
- This drawing is based on Greenhatch Survey Solutions drawing no. 19803-183_01_PES (dated 28/10/2019).

CDM 2015

Client notified of duties: **At Annual Review Meeting**

Principal Designer: **Bernard Sims Associates**

Unless noted below, all known hazards have been highlighted on the drawing:

- Asbestos survey report ref: J459221 by Tersus received 20/12/2019. No ACMs identified.
- Proposed layout subject to Building Control approval of fire strategy and access arrangements. Single dead-end means of escape from the basement is subject to Building Control approval (and possible fire engineered solution) as egress route is past the oven and the travel distance from basement level exceeds 18m (Both are existing conditions in the current PH layout)
- Structural Engineers details for structural opening at ground floor level received 05/12/2019. Refer to ABP Engineer's details ref: D731-01 and calculations ref: 101-103. Structural engineer to confirm the following prior to commencement of works:
  - Flat roof construction acceptable for imposed loads of new HVAC equipment, HVAC supports, scaffolding and foot traffic during and after construction
  - 160mm lowering of floor in customer area to allow for level threshold at entrance
  - Any existing walls to be removed identified as structural are subject to structural engineer's design and detail
  - Scaffolding is required to remove existing and install new extract duct flue. S.E. to confirm existing roof structure will accept imposed loads required.
- Customer area floor to be lowered to create level access threshold with 160mm step relocated to bake & serve area - Subject to review by Building Control. 100mm wide 'Plinth' to be retained to both sides of customer area to avert requirement of serving party wall notice
- Refer to AVE reports reference: Q1430 (Annex B and Odour Risk Assessment) for oven extract system odour abatement details and specification.
- Both gas and electric supplies / meters to be housed within new 30 minute fire rated cupboards. Ventilation to gas cupboard is to be to AVE design and detail
- Evidence of damp in basement. DPG to advise if specialist damp contractor will be appointed to inspect and provide report/quote for remedial works.
- Refused sacks to be kept internally and collection from front of store to be arranged with local council
- Extent of legal demise TBC.
- DPG to instruct DWP to provide fire strategy report in support of building regulations application

Note:
Bold annotation refers to new signage application.
All other text refers to amendments that form part of separate application: Ref no. 2020/0292/NEW

REV	Date	Drawn by:	Checked by:
C	14/04/2020	JJS	EOH
Fascia sign size reduced and drawing annotations amended following receipt of comments from conservation area advisory committee			
B	05/03/2020	BMR	JJS
Fascia sign size reduced and drawing annotations amended following receipt of comments from LPA			
A	17/01/2020	BMR	JJS
Annotations amended following PM email dated 15/01/20			
-	10/01/20	BMR	JJS
- Initial Issue			

Status: **S2** — Purpose of Issue: **For Construction**

drawing stage: **Stage 3 - Shopfit**

client: **Domino's Pizza Group**

project: **38 Camden High Street, Camden Town, London, NW1 0JH**

store: **PJ003931**

drawing title: **Proposed Shopfront Elevations**

date: **10/01/20** drawn: **BMR**

scale@A1: **1:50** checked: **JJS**

Rev **C**

Job No **11600-AEW-PJ003931-XX-DR-0015**

aew architects
0161 214 4370
www.aewarchitects.com