4000_DETAILS

LBMV architects

Luigi Montefusco Ltd
72 Haverstock Hill
NW3 2BE London
M+44 (0) 7837344073
T+44 (0) 207 483 3880

DRAWINGS STATUS		DRAWN	CHECKED
PLANNING PERMISSION	A3	UG - MF	LM
PROJECT TITLE		DATE	SCALE
HOUSE REFURBISHMENT		03.03.2020	
		DRAWING TITLE	
5 Lawn Road NW3 2XS		JOB NO	DRAWING NO
		0079	A4000

GENERAL NOTE
- This drawing should be removed from currency immediately when a revised version is issued.
- All dimensions to be checked on site by the contractor. Discrepancies to be reported before proceeding with the works.
- This drawing is copyrighted.
- All dimensions in mm's.

LEGEND

REV	DESCRIPTION	DATE	NAME

LBMV architects

Luigi Montefusco Ltd
72 Haverstock Hill
NW3 2BE London
M+44 (0) 7837344073
T+44 (0) 207 483 3880
info@lbmvarchitects.com
www.lbmvarchitects.com

DRAWINGS STATUS
PLANNING PERMISSION | A3

PROJECT TITLE
HOUSE REFURBISHMENT

5 Lawn Road
NW3 2XS

DRAWN	CHECKED
UG - MF	LM
DATE	SCALE
03.03.2020	1:50@A3

DRAWING TITLE
DETAILS

JOB NO	DRAWING NO
0079	A4001

GENERAL NOTE
- This drawing should be removed from currency immediately when a revised version is issued.
- All dimensions to be checked on site by the contractor. Discrepancies to be reported before proceeding with the works.
- This drawing is copyrighted.
- All dimensions in mm's.

LEGEND

1.50	0	1	2 m
1.100	0	1	5 m
1:500	0	10	20 m
1:1000	0	10	50 m
1:1250	0	10	50 m

N

REV	DESCRIPTION	DATE	NAME

DETAIL 01 - FRONT GARDEN PLAN

SCALE 1:50

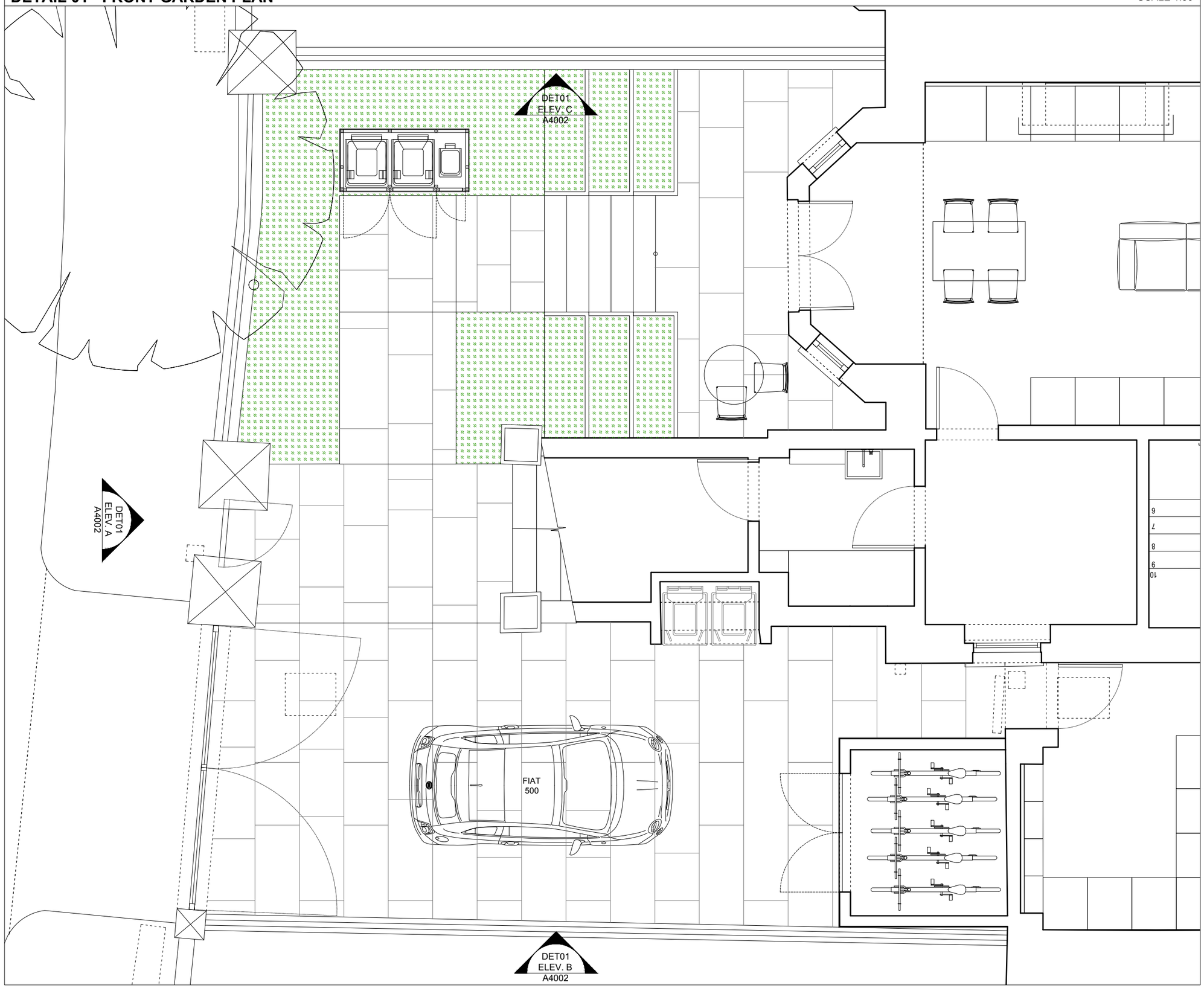

DETAIL 01

SCALE 1:50

DET01 - ELEVATION A

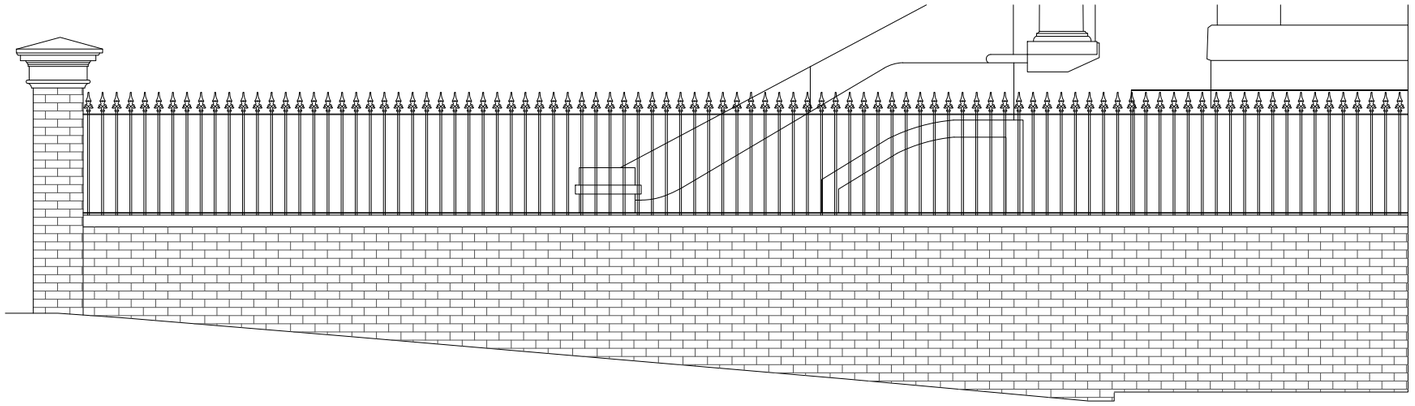

DET01 - ELEVATION B

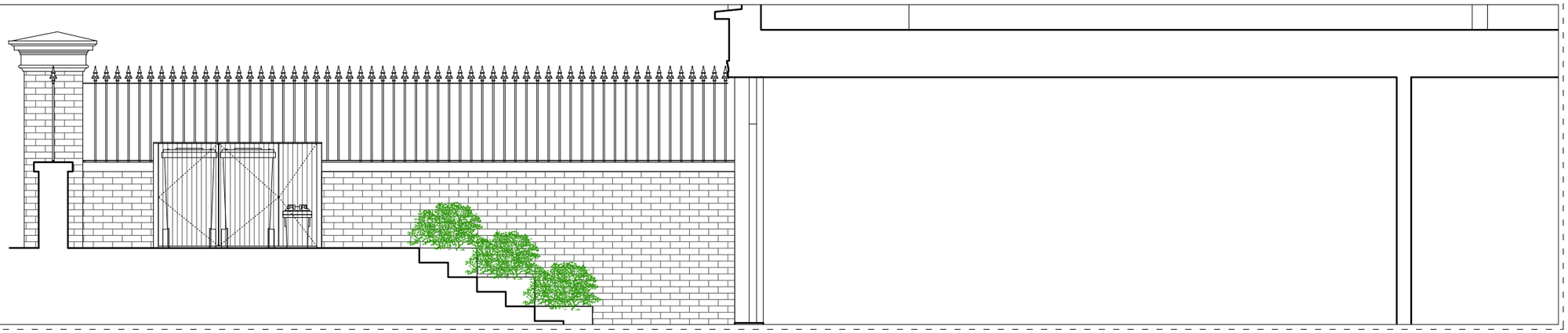

DET01 - ELEVATION C

LBMV architects

Luigi Montefusco Ltd
72 Haverstock Hill
NW3 2BE London
M+44 (0) 7837344073
T+44 (0) 207 483 3880

DRAWINGS STATUS		DRAWN	CHECKED
PLANNING PERMISSION	A3	UG - MF	LM
PROJECT TITLE		DATE	SCALE
HOUSE REFURBISHMENT		03.03.2020	1:50@A3
		DRAWING TITLE	
		DETAILS	
5 Lawn Road NW3 2XS		JOB NO	DRAWING NO
		0079	A4002

GENERAL NOTE

- This drawing should be removed from currency immediately when a revised version is issued.
- All dimensions to be checked on site by the contractor. Discrepancies to be reported before proceeding with the works.
- This drawing is copyrighted.
- All dimensions in mm's.

LEGEND

1.50	0	1	2 m
1.100	0	1	5 m
1:500	0	10	20 m
1:1000	0	10	50 m
1:1250	0	10	50 m

REV	DESCRIPTION	DATE	NAME

DETAIL 02 - NEW PROPOSED METAL GATE

SCALE 1:50

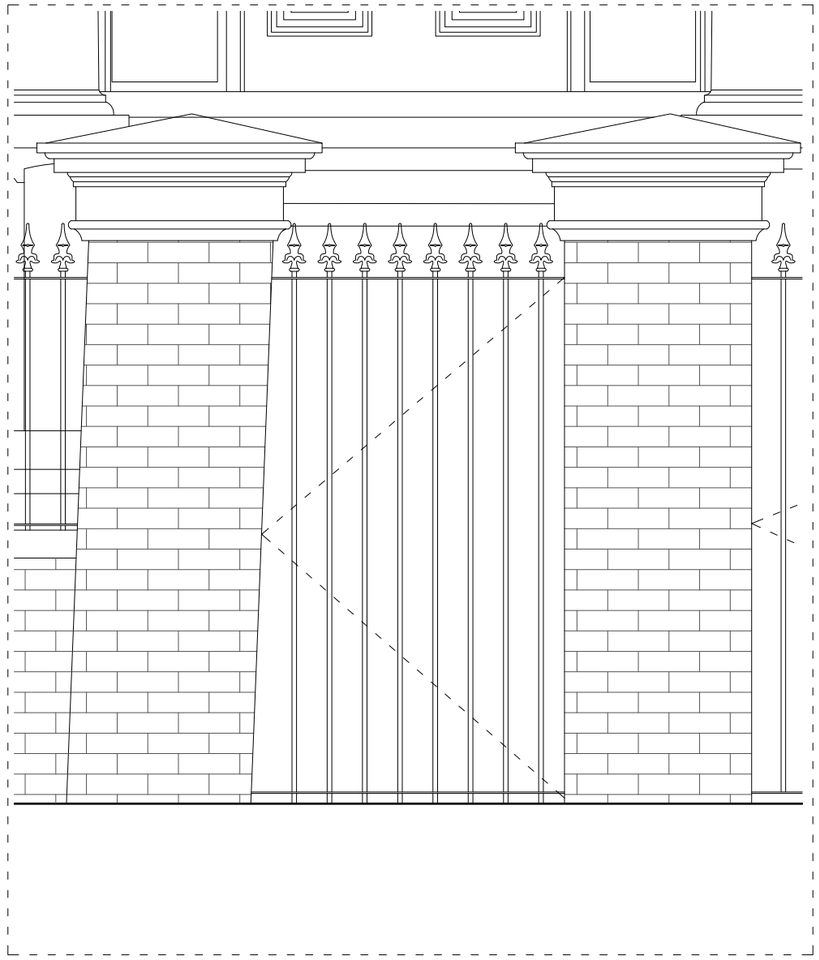

DETAIL 03 - CEDAR WOOD BIN STORAGE

SCALE 1:20

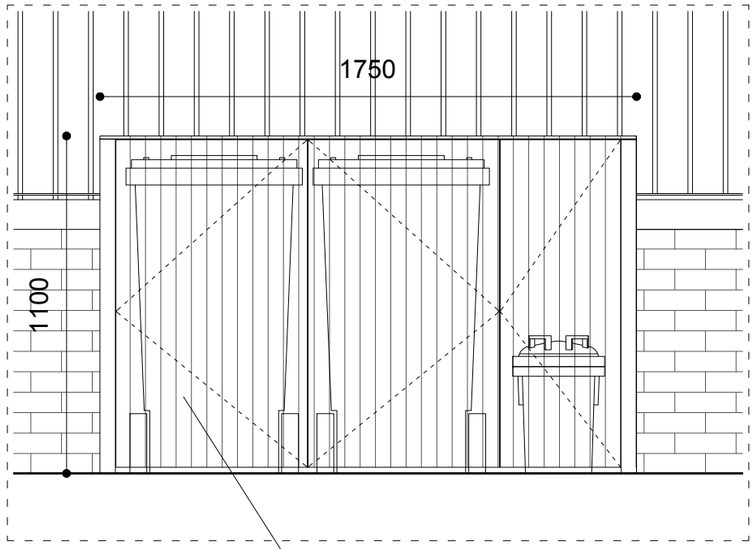

ELEVATION A

cedar wood
storage bin

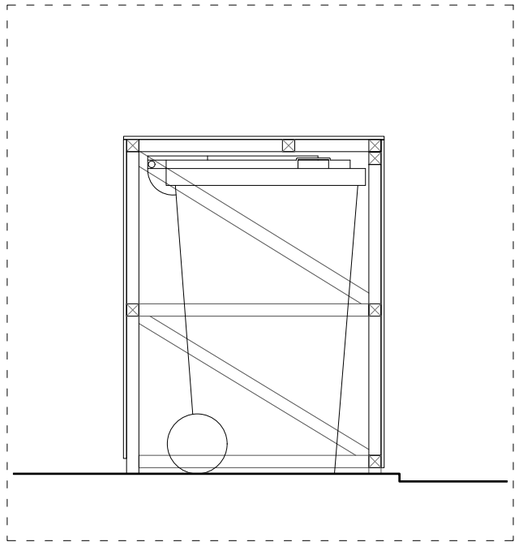

SECTION 01

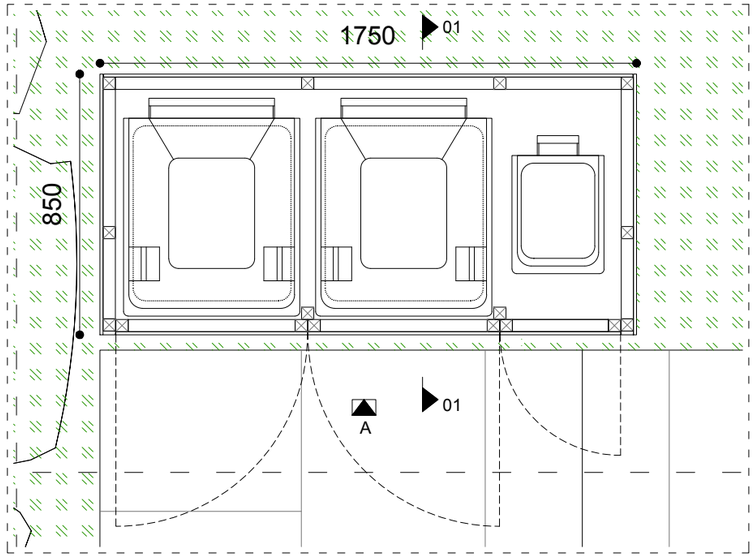

PLAN

LBMV architects

Luigi Montefusco Ltd
72 Haverstock Hill
NW3 2BE London
M+44 (0) 7837344073
T+44 (0) 207 483 3880

DRAWINGS STATUS		DRAWN	CHECKED
PLANNING PERMISSION	A3	UG - MF	LM
PROJECT TITLE		DATE	SCALE
HOUSE REFURBISHMENT		03.03.2020	1:20@A3
		DRAWING TITLE	
		DETAILS	
5 Lawn Road NW3 2XS		JOB NO	DRAWING NO
		0079	A4003

GENERAL NOTE

- This drawing should be removed from currency immediately when a revised version is issued.
- All dimensions to be checked on site by the contractor. Discrepancies to be reported before proceeding with the works.
- This drawing is copyrighted.
- All dimensions in mm's.

LEGEND

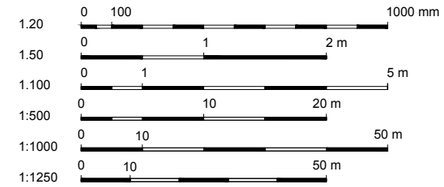

REV	DESCRIPTION	DATE	NAME

DETAIL04 - PROPOSED REAR STAIR

SCALE 1:50

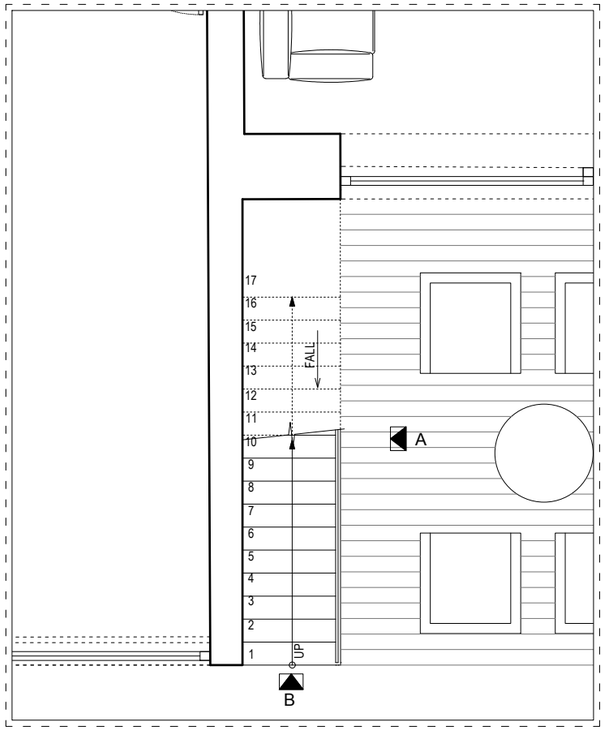

PLAN

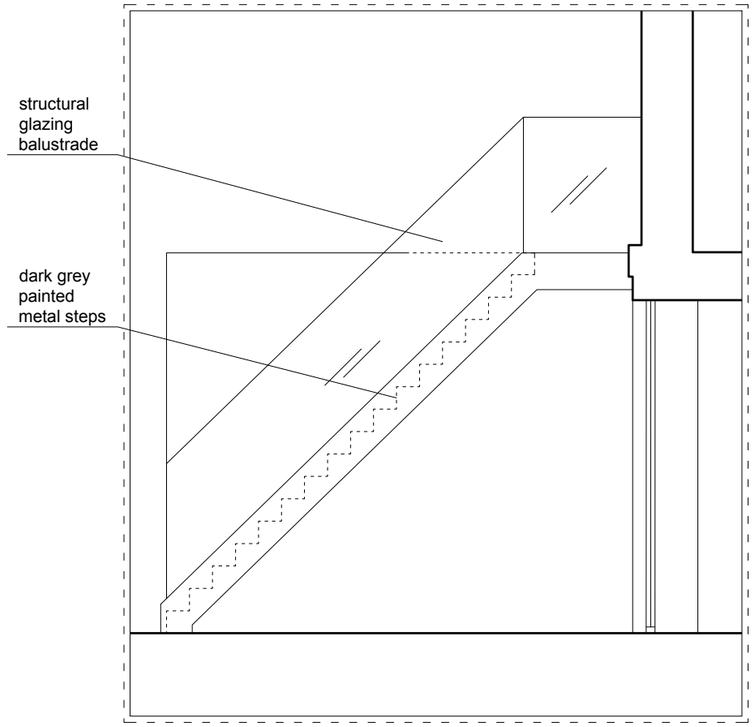

ELEVATION A

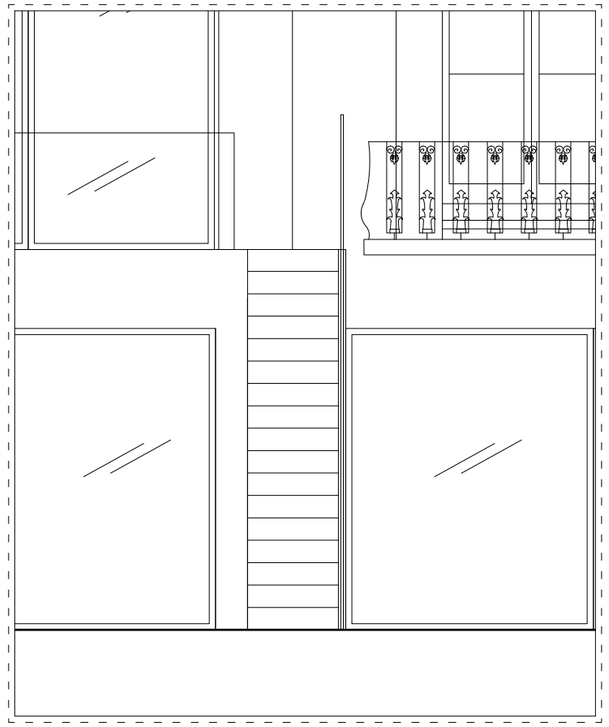

ELEVATION B

LBMV architects

Luigi Montefusco Ltd
72 Haverstock Hill
NW3 2BE London
M+44 (0) 7837344073
T+44 (0) 207 483 3880

DRAWINGS STATUS		DRAWN	CHECKED
PLANNING PERMISSION	A3	UG - MF	LM
PROJECT TITLE		DATE	SCALE
HOUSE REFURBISHMENT		03.03.2020	1:50@A3
		DRAWING TITLE	
		DETAILS	
5 Lawn Road NW3 2XS		JOB NO	DRAWING NO
		0079	A4004

GENERAL NOTE

- This drawing should be removed from currency immediately when a revised version is issued.
- All dimensions to be checked on site by the contractor. Discrepancies to be reported before proceeding with the works.
- This drawing is copyrighted.
- All dimensions in mm's.

LEGEND

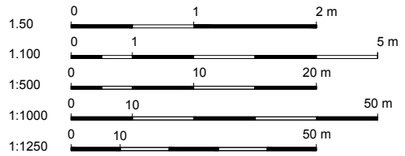

REV	DESCRIPTION	DATE	NAME

DETAIL05 - PROPOSED BICYCLE STORAGE

SCALE 1:50

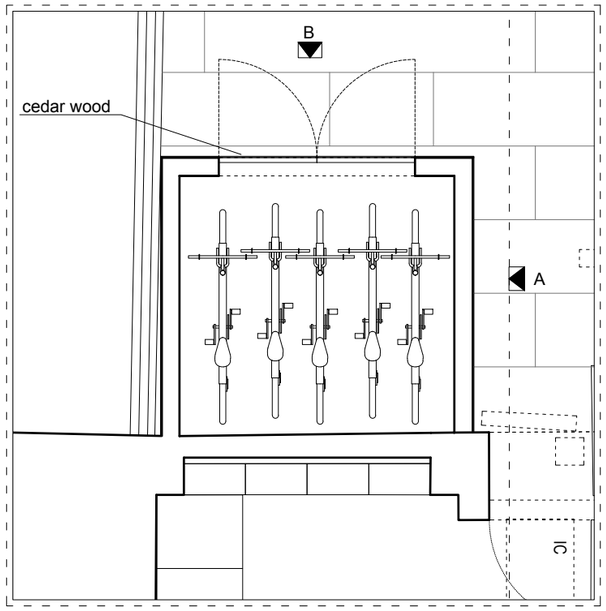

PLAN

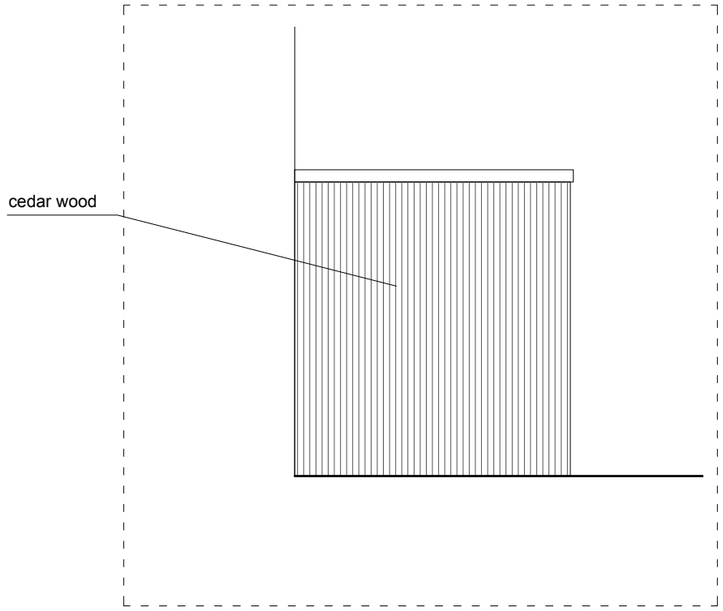

ELEVATION A

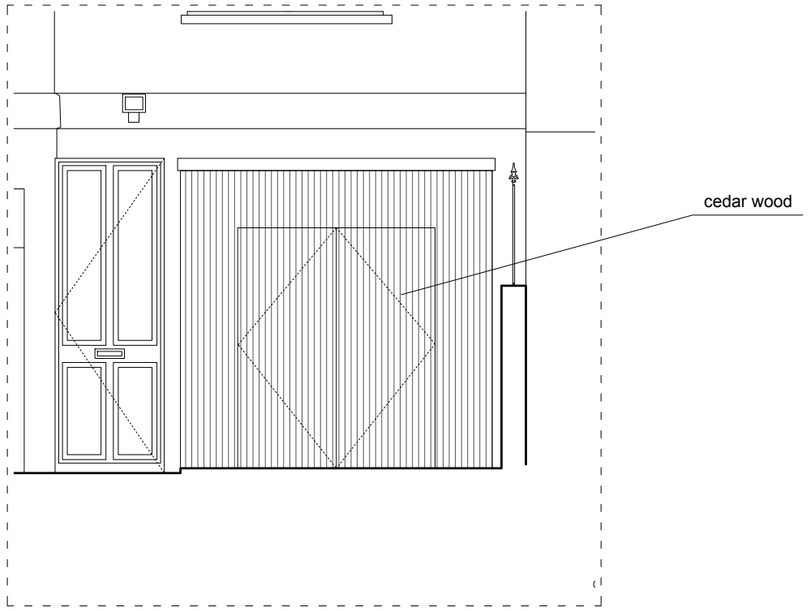

ELEVATION B

LBMV architects

Luigi Montefusco Ltd
72 Haverstock Hill
NW3 2BE London
M+44 (0) 7837344073
T+44 (0) 207 483 3880

DRAWINGS STATUS		DRAWN	CHECKED
PLANNING PERMISSION	A3	UG - MF	LM
PROJECT TITLE		DATE	SCALE
HOUSE REFURBISHMENT		03.03.2020	1:50@A3
		DRAWING TITLE	
		DETAILS	
5 Lawn Road NW3 2XS		JOB NO	DRAWING NO
		0079	A4005

GENERAL NOTE

- This drawing should be removed from currency immediately when a revised version is issued.
- All dimensions to be checked on site by the contractor. Discrepancies to be reported before proceeding with the works.
- This drawing is copyrighted.
- All dimensions in mm's.

LEGEND

1.50	0	1	2 m
1.100	0	1	5 m
1:500	0	10	20 m
1:1000	0	10	50 m
1:1250	0	10	50 m

REV	DESCRIPTION	DATE	NAME

EXISTING TYPICAL TRADITIONAL SASH WINDOW DETAIL

SCALE 1:20

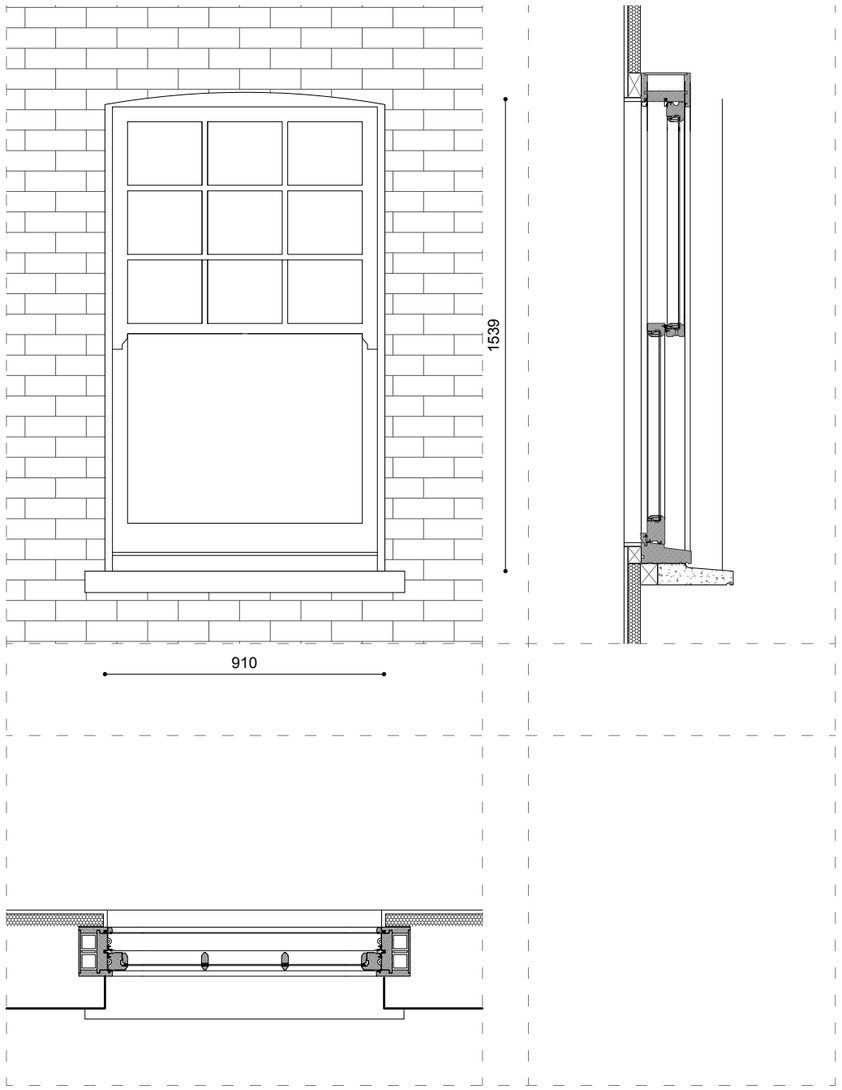

FRAME DETAILS

SCALE 1:5

HEAD SECTION

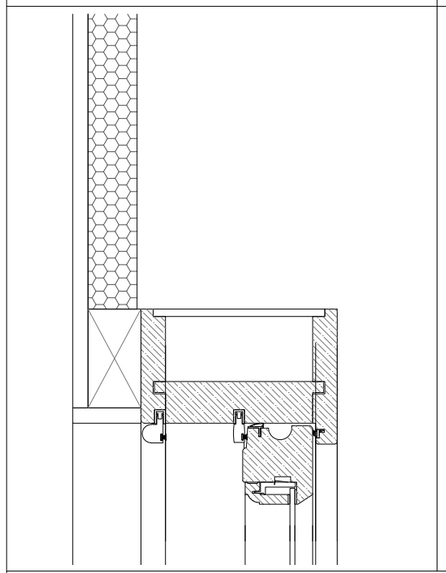

MIDDLE SECTION

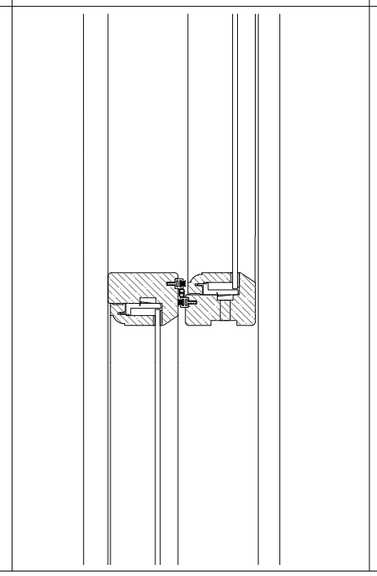

THRESHOLD SECTION

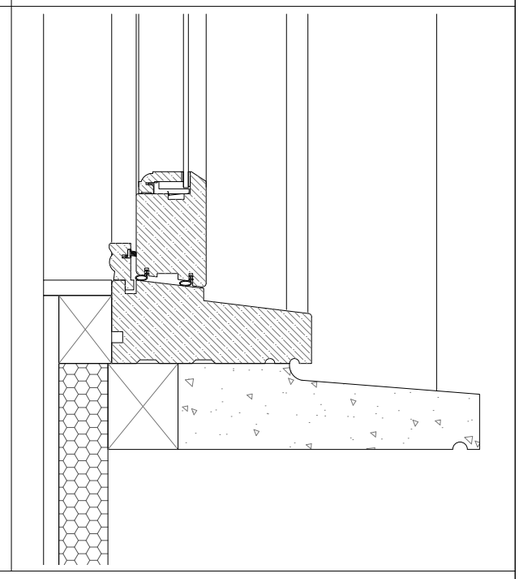

PLAN SECTION

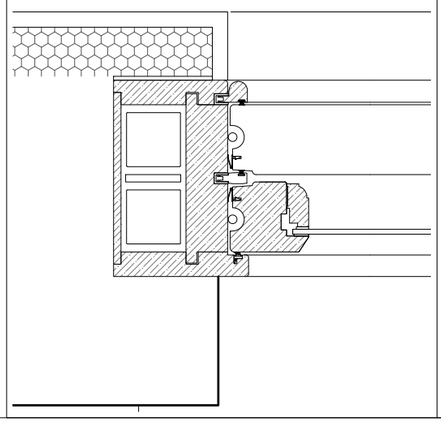

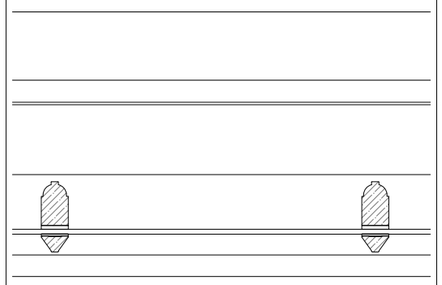

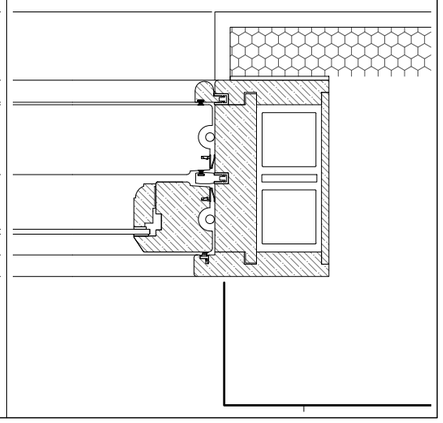

LBMV architects

Luigi Montefusco Ltd
72 Haverstock Hill
NW3 2BE London
M+44 (0) 7837344073
T+44 (0) 207 483 3880

DRAWINGS STATUS		DRAWN	CHECKED
PLANNING PERMISSION	A3	UG - MF	LM
PROJECT TITLE		DATE	SCALE
HOUSE REFURBISHMENT		03.03.2020	1:20@A3
		DRAWING TITLE	
		DETAILS	
5 Lawn Road NW3 2XS		JOB NO	DRAWING NO
		0079	A4006

GENERAL NOTE

- This drawing should be removed from currency immediately when a revised version is issued.
- All dimensions to be checked on site by the contractor. Discrepancies to be reported before proceeding with the works.
- This drawing is copyrighted.
- All dimensions in mm's.

LEGEND

1.50	0	1	2 m
1.100	0	1	5 m
1:500	0	10	20 m
1:1000	0	10	50 m
1:1250	0	10	50 m

REV	DESCRIPTION	DATE	NAME

PROPOSED TYPICAL TRADITIONAL SASH WINDOW DETAIL

SCALE 1:20

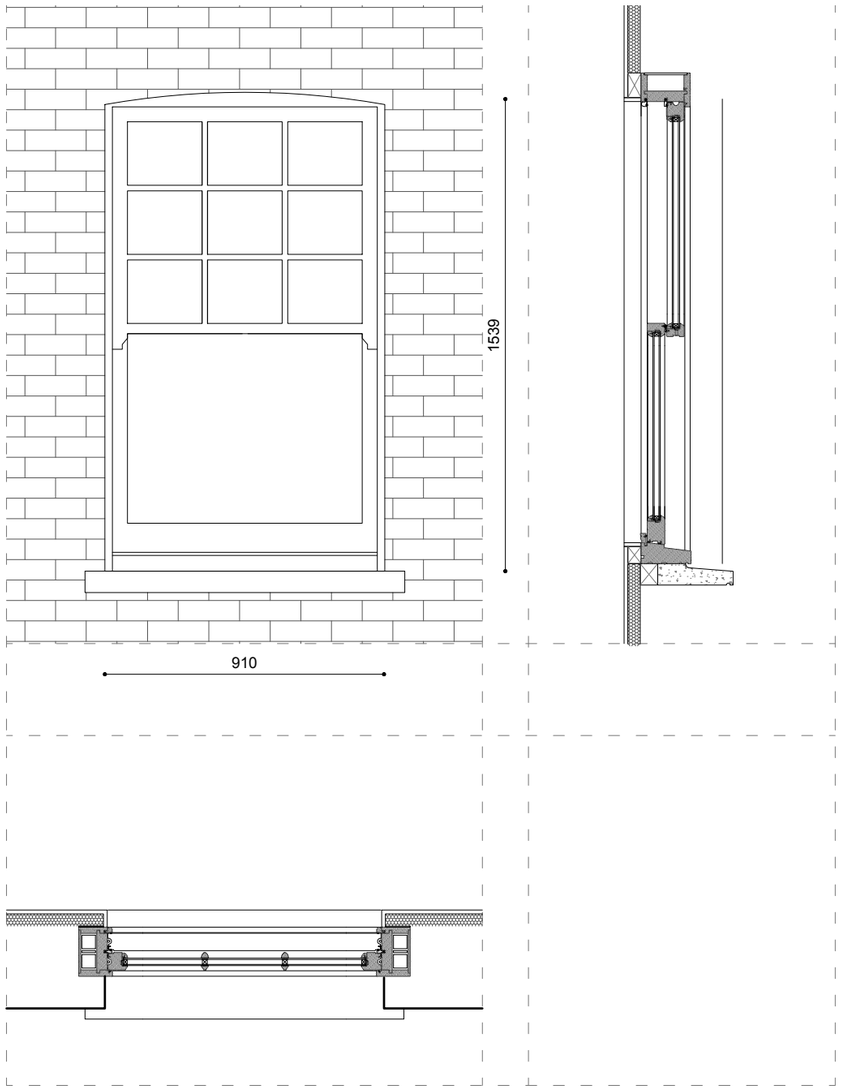

FRAME DETAILS

SCALE 1:5

HEAD SECTION

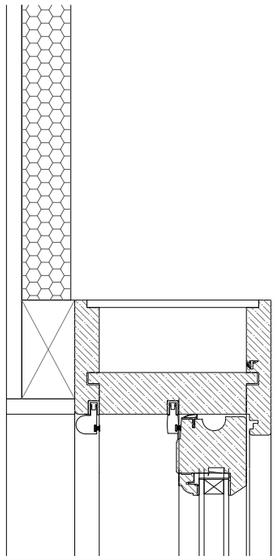

MIDDLE SECTION

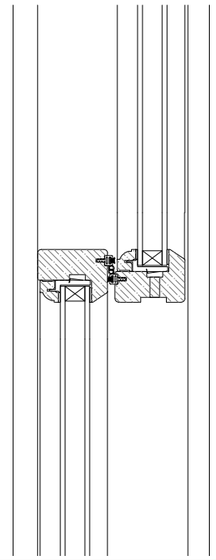

THRESHOLD SECTION

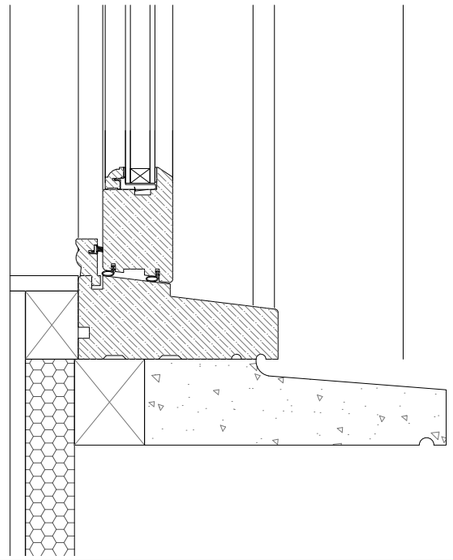

PLAN SECTION

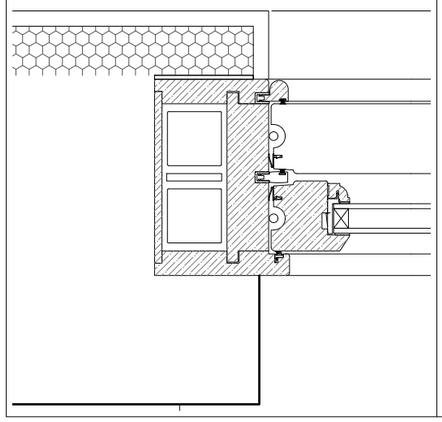

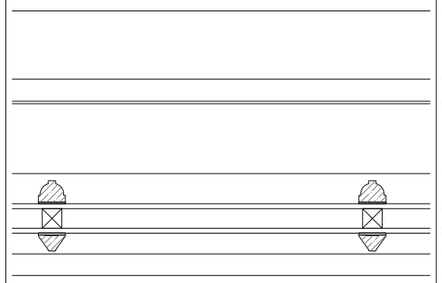

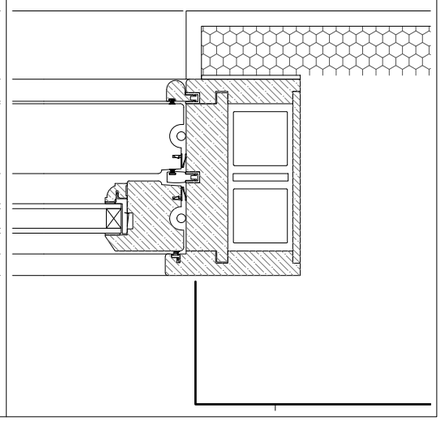

LBMV architects

Luigi Montefusco Ltd
72 Haverstock Hill
NW3 2BE London
M+44 (0) 7837344073
T+44 (0) 207 483 3880

DRAWINGS STATUS		DRAWN	CHECKED
PLANNING PERMISSION	A3	UG - MF	LM
PROJECT TITLE		DATE	SCALE
HOUSE REFURBISHMENT		03.03.2020	1:20@A3
		DRAWING TITLE	
		DETAILS	
5 Lawn Road NW3 2XS		JOB NO	DRAWING NO
		0079	A4007

GENERAL NOTE

- This drawing should be removed from currency immediately when a revised version is issued.
- All dimensions to be checked on site by the contractor. Discrepancies to be reported before proceeding with the works.
- This drawing is copyrighted.
- All dimensions in mm's.

LEGEND

1.50	0	1	2 m
1.100	0	1	5 m
1:500	0	10	20 m
1:1000	0	10	50 m
1:1250	0	10	50 m

REV	DESCRIPTION	DATE	NAME