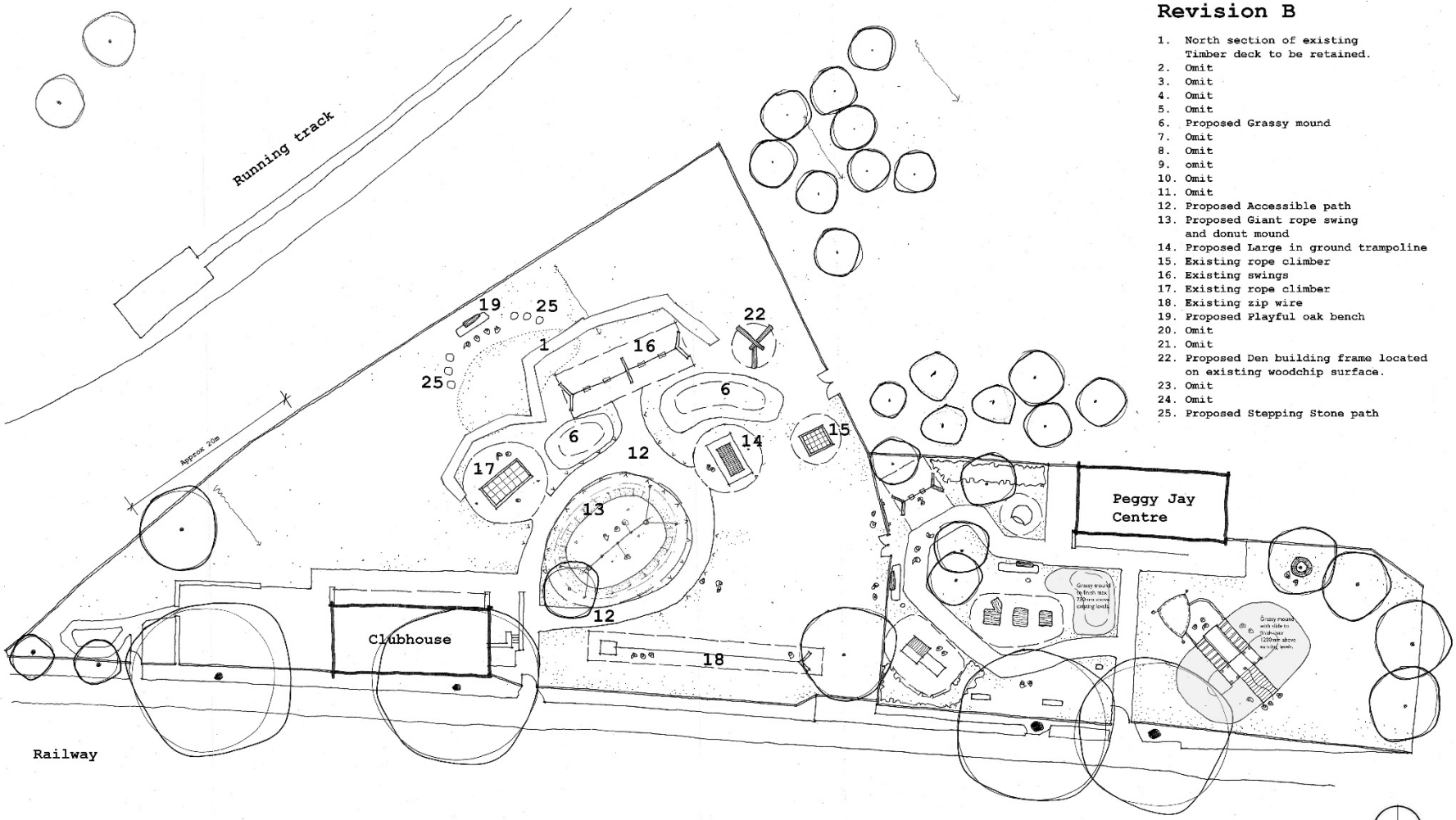

Revision B

1. North section of existing Timber deck to be retained.
2. Omit
3. Omit
4. Omit
5. Omit
6. Proposed Grassy mound
7. Omit
8. Omit
9. omit
10. Omit
11. Omit
12. Proposed Accessible path
13. Proposed Giant rope swing and donut mound
14. Proposed Large in ground trampoline
15. Existing rope climber
16. Existing swings
17. Existing rope climber
18. Existing zip wire
19. Proposed Playful oak bench
20. Omit
21. Omit
22. Proposed Den building frame located on existing woodchip surface.
23. Omit
24. Omit
25. Proposed Stepping Stone path

NORTH

December 2019 - Spot heights shown on mounds in Peggy Jay Centre Garden.

Drawing No. DW27/01

LANDSCAPE ARCHITECTS

Hampstead Heath Nature Play - Proposed Layout Rev B - January 2019