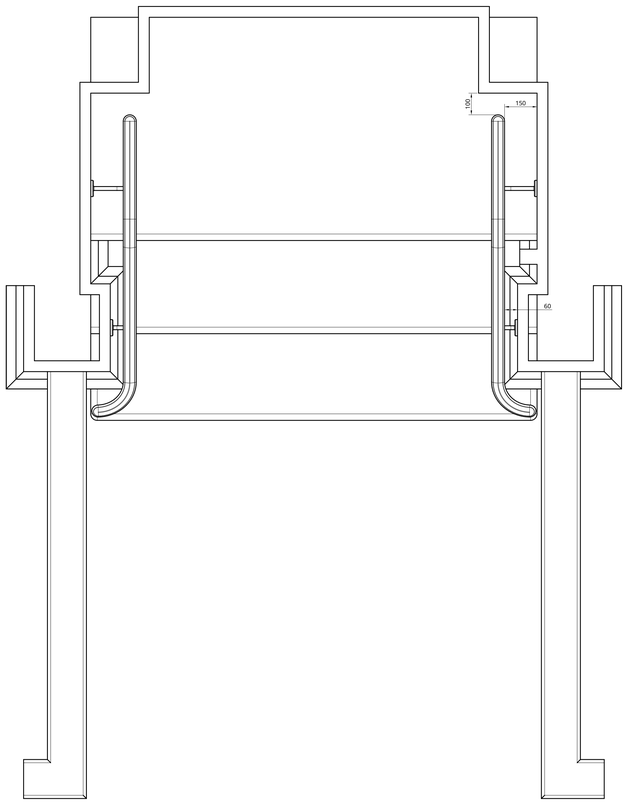

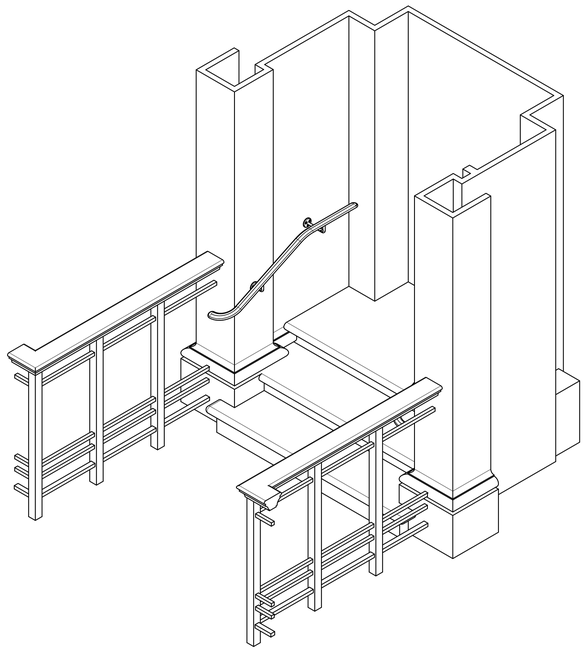

1:16

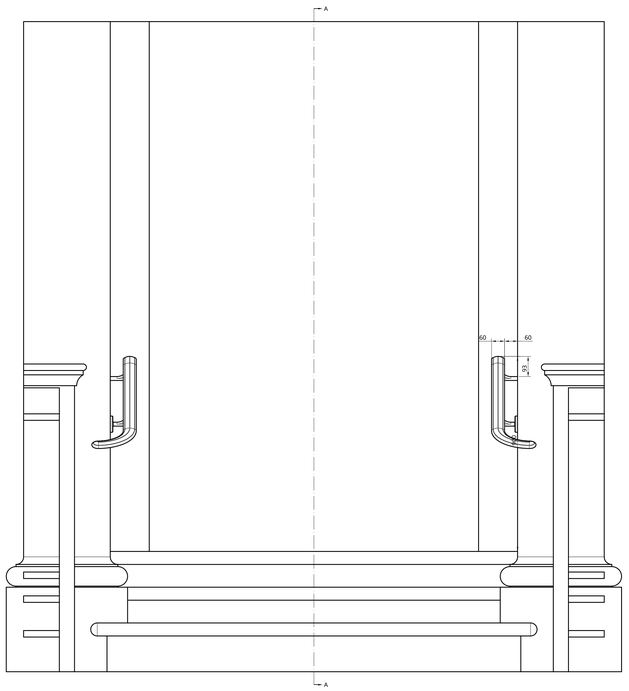

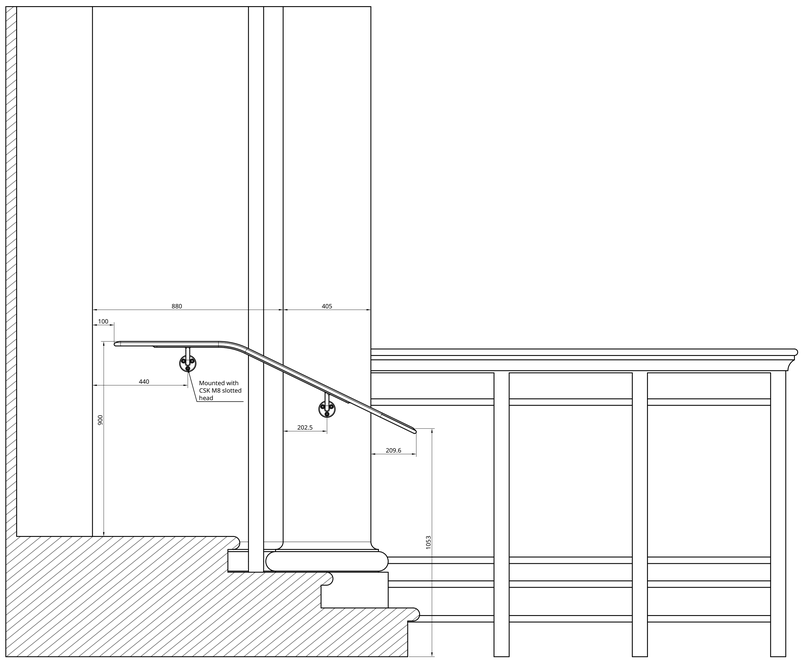

A - A

UNLESS OTHERWISE SPECIFIED, DIMENSIONS ARE IN MILLIMETRES		NAME	SIGNATURE	DATE	JLK—DS
ANGULAR ± °	DRAWN	JOHAN KING		2019-11-19	
SURFACE FINISH	REVISED	JOHAN KING		2019-11-19	
	APPROVED				
DO NOT SCALE DRAWING	THE INFORMATION CONTAINED IN THIS DRAWING IS THE SOLE PROPERTY OF JLK—DS. ANY REPRODUCTION IN PART OR AS A WHOLE WITHOUT THE WRITTEN PERMISSION OF JLK—DS. © Newlyn design ltd. IS PROHIBITED				
BREAK ALL SHARP EDGES AND REMOVE BURRS					
THIRD ANGLE PROJECTION	MATERIAL		FINISH		

Rear Ground Floor
70 Chalk Farm Road
NW1 8AN, London

contact@jlk-ds.com
www.jlk-ds.com
+44 (0)7910969055

TITLE

CAMBRIDGE GATE

CG01 HAND RAIL

IN SITU ASM-2885

SIZE	DWG NO.	REV.
A0	ASM-2885 / DRW-2887	A

SCALE	WEIGHT	SHEET
1:10		1 of 1