N.B. Secondary glazing only installed in rooms that do not contain original walls linings, nor paneling.

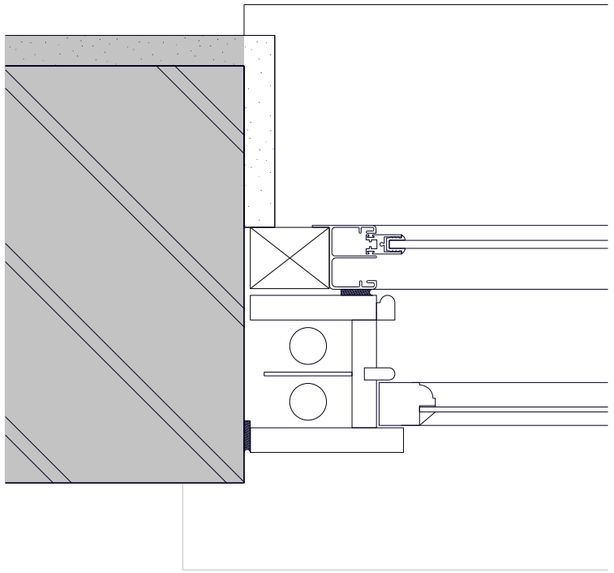

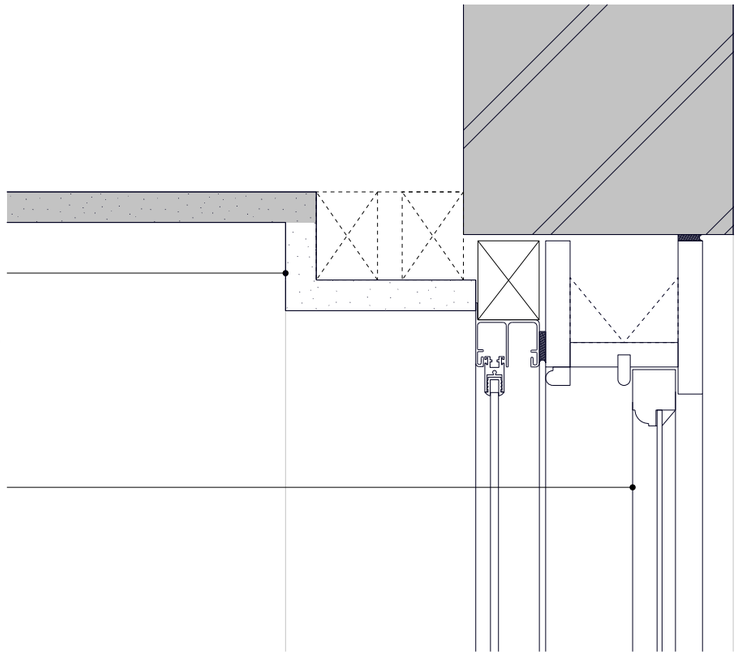

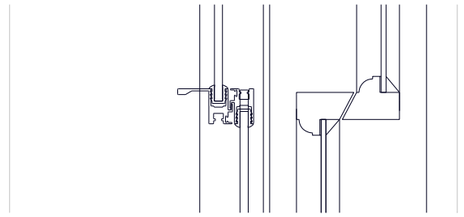

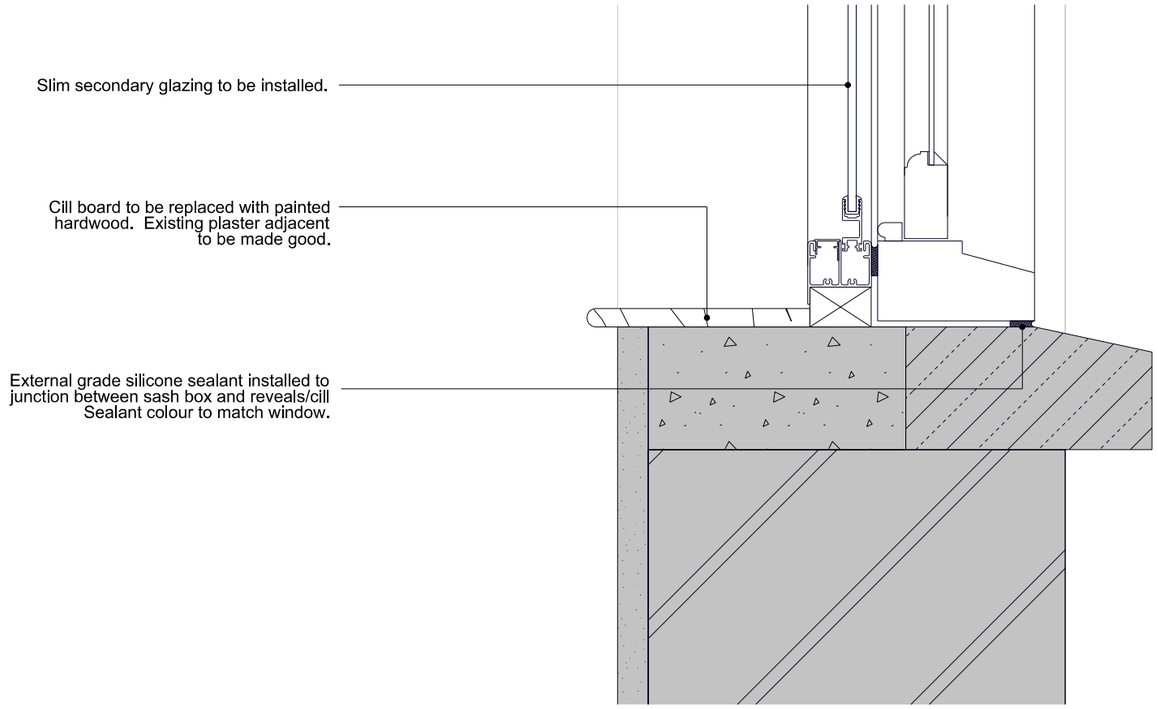

1. It is the contractor's responsibility to ensure that design principles, calculations, drawings and final construction must conform to the current building regulations, the CDM regulations and the relevant british or european codes of practice as appropriate
2. The contractor must verify all site dimensions, drawings, details and specifications and report any discrepancies to the architect before proceeding with any work.
3. All specified items are to be installed in accordance with the manufacturer's recommendations.
4. The drawing is to be read in conjunction with the other relevant consultants drawings.
5. This drawing is copyright of the architect.

Drawing Status:
Information

Revision		Date

prewett bizley architects

118a London Wall, London EC2Y 5JA
rp@ prewettbizley.com
020 7256 2195
www.prewettbizley.com

Project
39 Great James Street
London
WC1N 3HB

Drawing
Secondary glazed sash window details

Scale
1:5 @ A3

Date
July 2018

Drg. no.
125 D 129

Revision
-