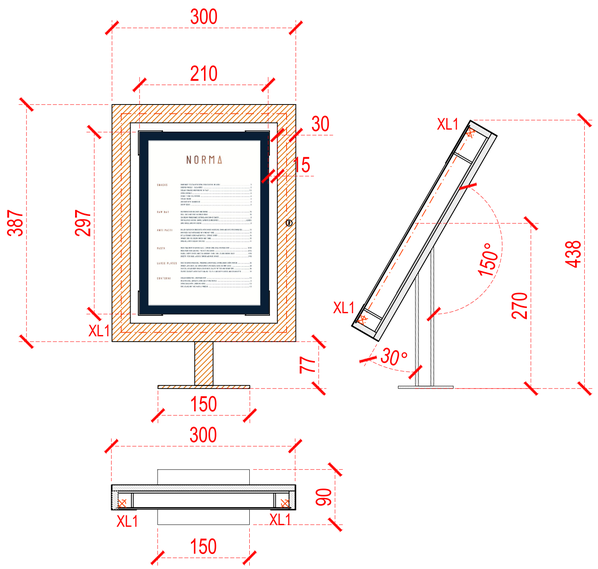

1 Menu Box - Fron View, section and plan
Scale: 1:5 @ A3

KEYS:

BACK BOX::
50mm DEEP 18GAUGE
FOLDED AGED COPPER

FRONT:
PIANO HINGED & LOCKABLE
FOLDED 18 GAUGE
SILICONED 5mm CLEAR
POLYCARBONATE FRONT,
GOLD VINYL PICTURE
FRAME MASKING
SYLICONE.

MENU:
TWINSTICK FIXED BUILT UP
5/3mm OPAL ACRYLIC MENU
HOLDER / LIGHT DIFFUSER,
10mm PERIMETER FACE
FLANGE,
30x10mm PERIMETER
FRAME TO REAR
TWINSTICK FIXED BLACK
FELT PIN BOARD

ELECTRICS:
12V WARM WHITE LED LIGHTING STRIP TO
INNER RETURN PERIMETER GIVING MENU
EDGE ILLUMINATION.
12V DRIVER MOUNTED IN BOX

FIXING POST:
40mm STEEL SHS WRAPPED IN AGED
COPPER, 200x125x5mm GOLD STEEL
FIXING PLATE WITH AGED COPPER COVER
PLATE.
270x180x5mm GOLD STEEL BOX PLATE
WITH AGED COPPER COVER PLATE.

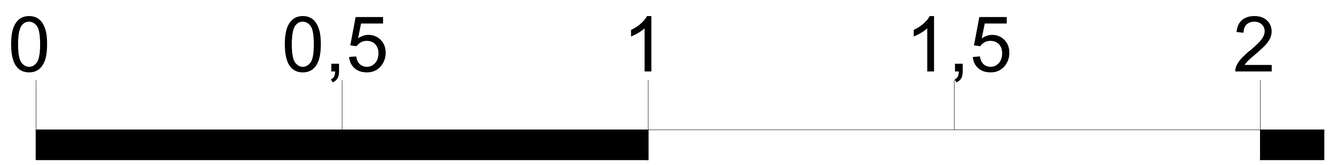

REV	DATE	REVISION NOTES
A	21.08.19	PLANNING ISSUE

This drawing is the property of Rosendale Design.
Copyright is reserved to them and the drawing is issued on the condition that it is not copied, either wholly or in part, without the written consent of Rosendale Design.

All Dimensions to be checked and verified on site prior to the commencement of any work.No construction is to be conducted based on these drawings.

Rosendale Design
STUDIO 1&2
7, CUBITT STREET
LONDON, WC1X 0LN
T- +44 (0)2035829860
M- +44 (0)7515949227

WWW.ROSENDALEDESIGN.COM

DRAWING STATUS
PLANNING ISSUE

CLIENT
GINGERBERY LTD

PROJECT TITLE
NORMA

DRAWING TITLE
PROPOSED MENU BOX
DETAIL "B"

PROJECT NO.
164

SCALE
1/5 @ A1
1/10 @ A3

DATE
30.01.2019

DRAWN
DA

APPROVED
DA

DRAWING NO.
164-EL-EXT-03

REVISION
A