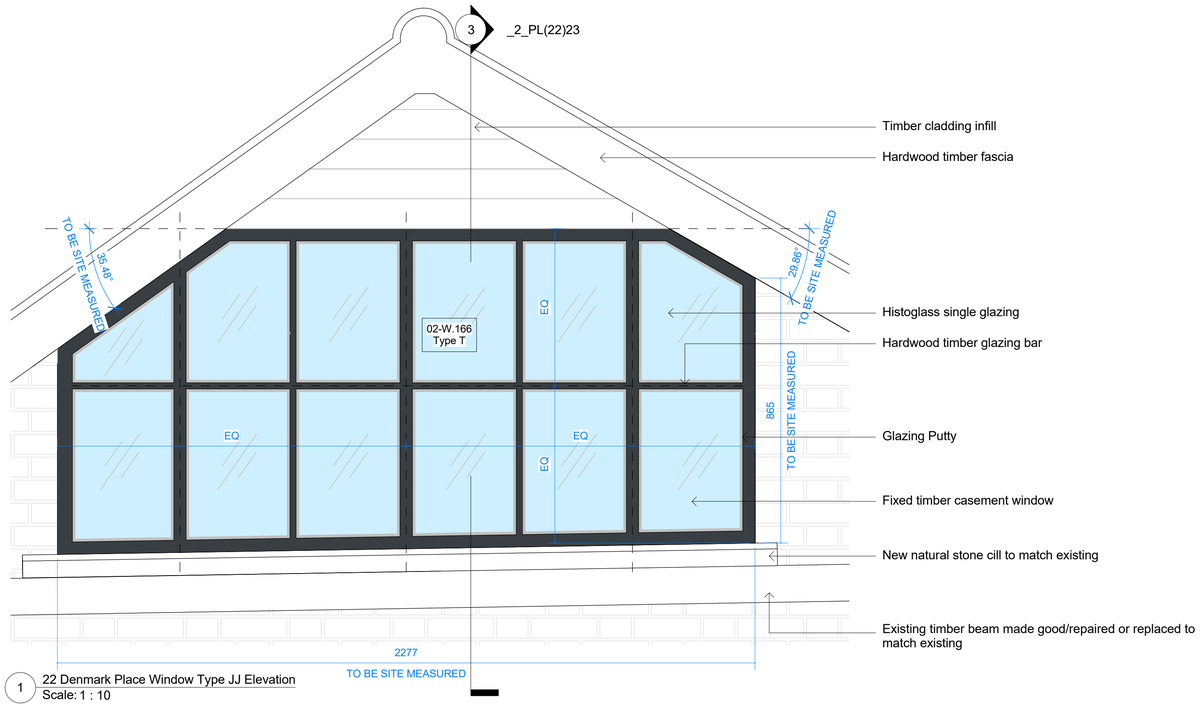

1 22 Denmark Place Window Type JJ Elevation
Scale: 1 : 10

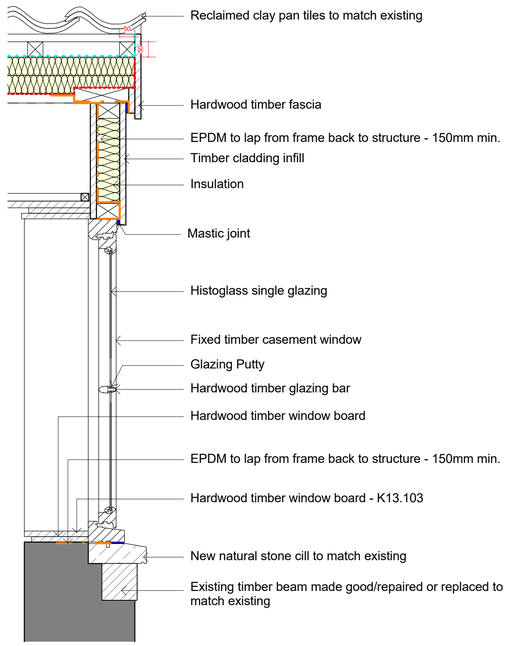

3 22 Denmark Street Section Detail
Scale: 1 : 10

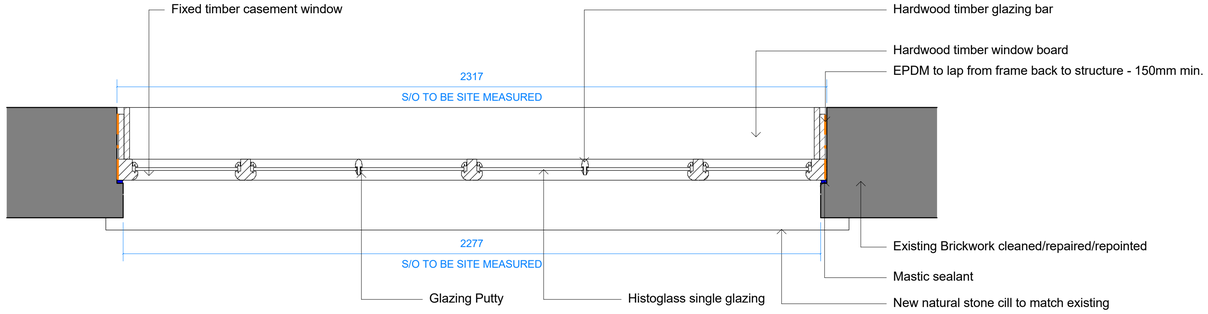

2 22 Denmark Place Window Type JJ Plan
Scale: 1 : 10

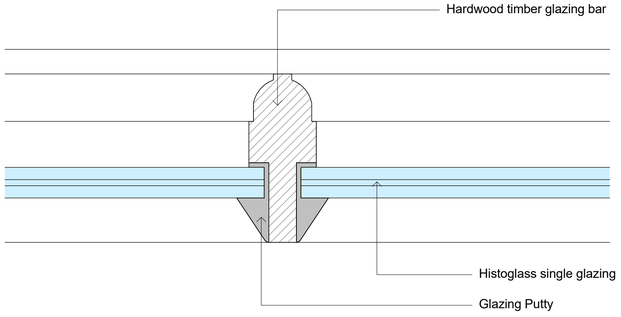

4 22 Denmark Place Window Glazing Bar Profile
Scale: 1 : 1

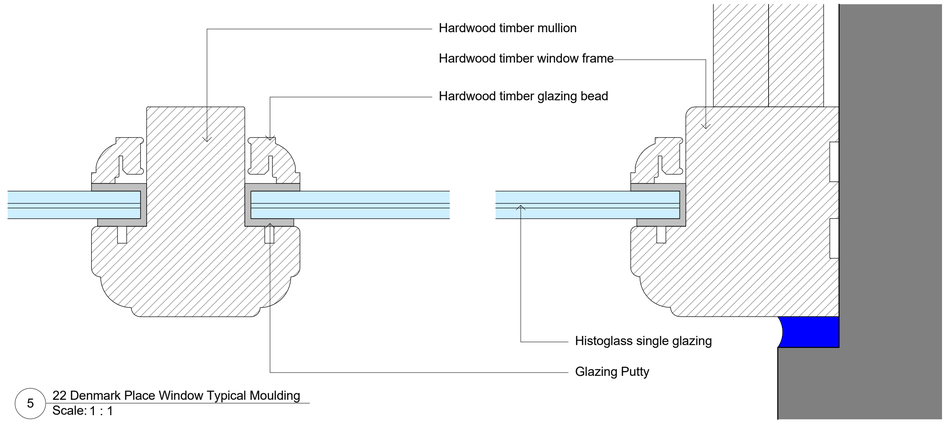

5 22 Denmark Place Window Typical Moulding
Scale: 1 : 1

Key Plan:

CDM:

Risks

Refer to the Risk Register for more information.

Notes:

Project: **St Giles Circus**

Project Number: **1793**

Drawing Title:
Proposed - 22 Denmark Place East Window

Drawing No.
1793_2_PL(22)23

Scale@A1:**As indicated**

Issued for: **S1 - INFORMATION**

Revision:
P01 20.06.19 Issued for Information

Orms
1 Oliver's Yard
55-71 City Road
London
EC1Y 1HQ
0207 833 8533
orms@orms.co.uk
orms.co.uk

Do not scale. All dimensions to be confirmed on site. Information contained in this drawing is the sole copyright of Orms designers + architects ltd and is not to be reproduced without permission.