REF: C1

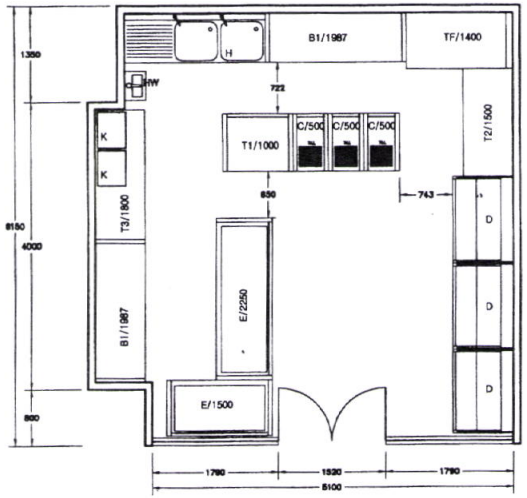

PROPOSED FLOOR PLAN

KEY		
LETTER	SYMBOL	DESCRIPTION
E/1500	E/1500	1500 X 800 X 900mm FRIDGE UNIT WITH GLASS SCREEN.
E/2250	E/2250	REF. BF 8G 2250 X 800 X 900mm WORKTOP FRIDGE UNIT WITH GLASS SCREEN
T1/1000	T1/1000	REF. NG 75 500 x 800 x 900mm TILL ON NEUTRAL UNIT 80
T2/1500	TF/1400	REF. NG 75 1500 x 700 x 2000mm
T3/1500	T3/1800	REF. NG 75 1800 x 700 x 900mm
C/500	C/500	REF. NG 75 500 x 800 x 900mm TILL ON NEUTRAL UNIT 80
D	D	DISPLAY FRIDGE 1250 x 850 x 2100
H	H	1800x 700x 900mm SINK
B1	B1/1987	1987x 700x 900mm WORKTOP FRIDGE WITH GLASS.
TF/1400	TF/1400	1400x 800x 2000mm TALL FRIDGE
K	K	MICROWAVE

PLANS APPROVED

15 NOV 2007

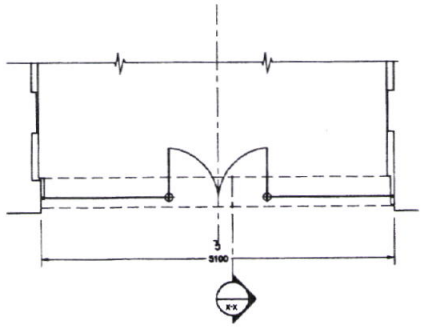

PLAN (FRONT SHOPFRONT)

FASCIA SIGN.
METAL SPRAY – PAINTED WHITE PANEL WITH 'BUILT UP' ACRYLIC LOGOS + LETTERING APPLIED DIRECT TO PANEL FACE. CENTRE STRIPES AND TEXT ARE INTERNALLY ILLUMINATED TO CREATE AN HALO EFFECT. SEE PHOTOGRAPH 03 FOR FURTHER INFORMATION.
FACE OF SIGN SET BACK 8mm FROM LANDORDS PILASTER.

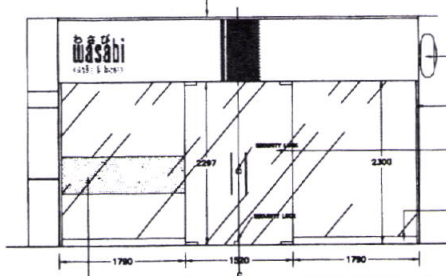

PROJECTING SIGN FIXED OFF FASCIA. ILUMINATED

SAA GLAZING CHANNEL TO ACCOMODATE SHUFFLE GLAZE SYSTEM

ARMOUR PLATE DOORS FLOOR SPRING WITH 90° LOCKING FACILITY.

SAA STALLRISER 100mm HIGH

PAVEMENT LEVEL

WASABI LOGO TO MANIFEST GLAZING

DOORS TO BE IN OPEN POSITION PERMANENTLY DURING TRADING HOURS

FRONT ELEVATION

DOOR FURNITURE –
- BOTH DOORS ON FLOOR SPRINGS (90° LOCKING) WITH HEAD PIVOTS. THRESHOLD COVERS SS BRUSHED FINISHED
- 450mm 'D' HANDLES TO WASABI APPROVAL SS SATIN FINISHED,
- PATCH FITTINGS SS BRUSHED FINISHED,

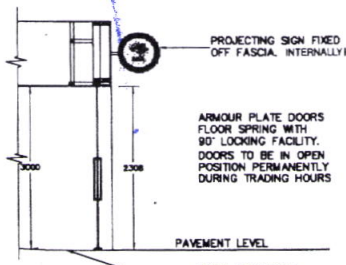

PROJECTING SIGN FIXED OFF FASCIA. INTERNALLY ILUMINATED

ARMOUR PLATE DOORS FLOOR SPRING WITH 90° LOCKING FACILITY.
DOORS TO BE IN OPEN POSITION PERMANENTLY DURING TRADING HOURS

PAVEMENT LEVEL

LEVEL THRU WITH PAVEMENT TO ALLOW DOOR OPENING THEN RAMP UP TO INTERNAL FLOORING LEVEL MIN 1:12 RAMP.

SECTION X–X

GENERAL NOTES:

[illegible]

☐ FOR INFORMATION ONLY ☒ FOR APPROVAL ISSUE
☐ PRELIMINARY DRAWING ☐ CONSTRUCTION ISSUE

REV	DESCRIPTION	DATE	BY
B	NEW LAYOUT	13.08.07	IA
A	ADD SHOPFRONT DRAWINGS + INFO	13.06.07	IA

Unit 8/9/10
St. Pancras Commercial Centre
63 Pratt street
London NW1 0BY
Tel. 0207 485 4488 Fax. 0207 485 4589

CLIENT: WASABI UK LTD

PROJECT: 127 Tottenham Court Road LONDON

TITLE: SECTION AND THE WORKS

DRAWN	CHK'D	DATE	SCALE	REV.
IMA		June 2007	1:50	B

DWG No. TC

SCALE : 1/100