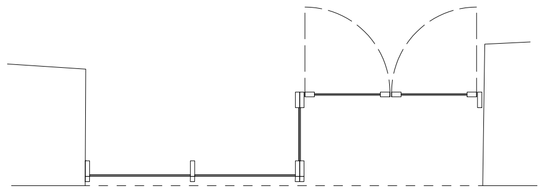

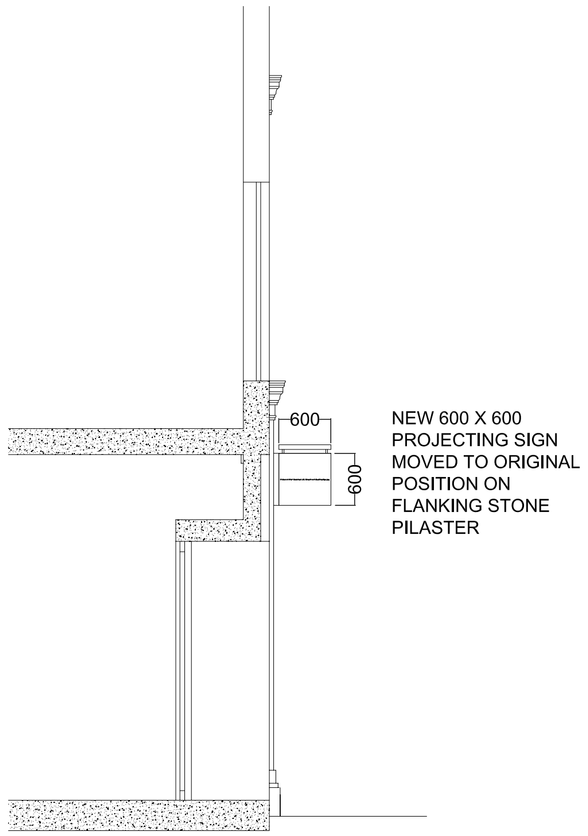

SHOP FRONT SECTION

NEW PROJECTING SIGN TO BE RELOCATED ONTO PILASTER IN ORIGINAL POSITION - MAKING GOOD OLD BOLT HOLES

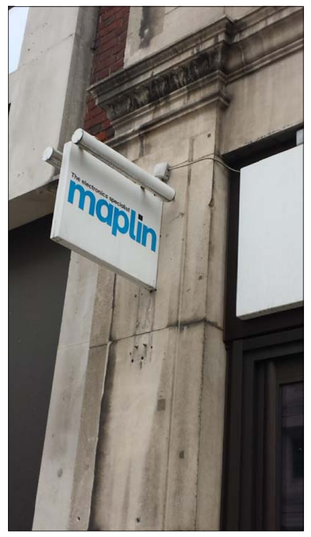

EXAMPLE OF MAPLIN SIGN ON PILASTER FURTHER TO WEST

SHOP FRONT PLAN AND ELEVATION

SHOP FRONT PHOTOS

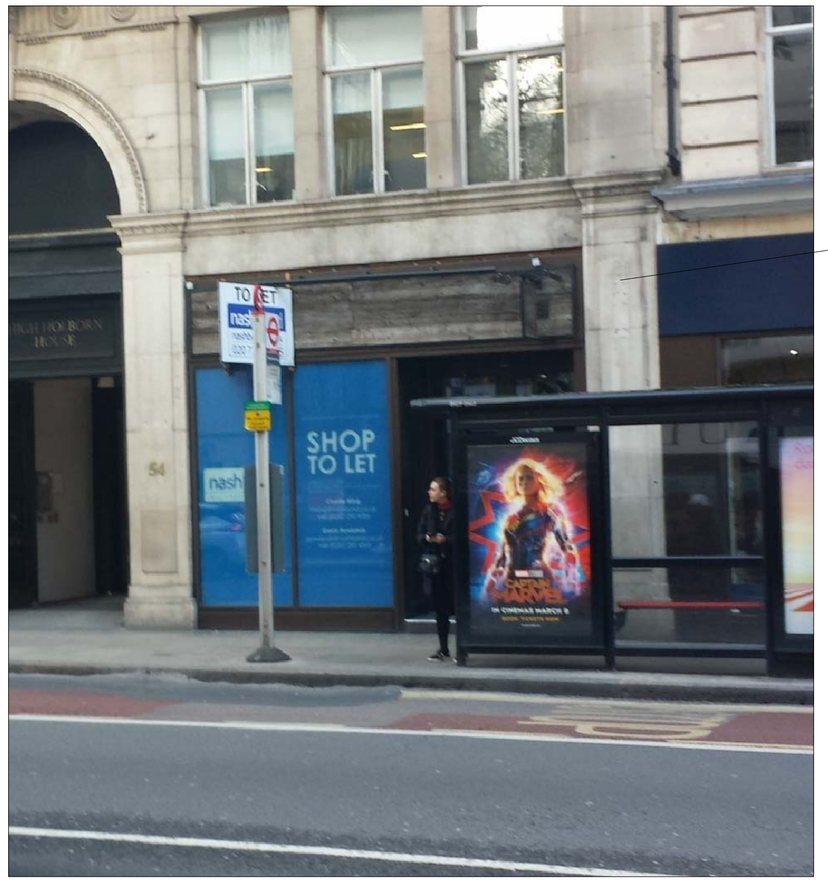

NEW 760 X 760 PROJECTING SIGN MOVED TO ORIGINAL POSITION ON FLANKING STONE PILASTER

No.	Revisions	Date	By
C	Issued for Permits	2019-05-30	tf
A	Issued to landlord for approval	2019-03-28	tf
PRE	Issued to team for comment	2019-03-20	tf

"ALL DRAWINGS, SPECIFICATIONS AND RELATED DOCUMENTS ARE THE COPYRIGHT PROPERTY OF THE ARCHITECT AND MUST BE RETURNED UPON REQUEST. REPRODUCTION OF DRAWINGS, SPECIFICATIONS AND RELATED DOCUMENTS IN PART OR WHOLE IS FORBIDDEN WITHOUT THE ARCHITECT'S WRITTEN PERMISSION."

CONTRACTOR MUST CHECK AND VERIFY ALL DIMENSIONS ON THE JOB. THIS DRAWING SHALL NOT BE USED FOR CONSTRUCTION PURPOSES UNLESS COUNTERSIGNED BY:

Fairlie da Prato / J S L Architects
32 Bloomsbury Street London WC1B 3QJ
T. +44 (0)7940 573 990

Project
Hawes and Curtis

Site Location
52 High Holborn, London

North

Drawn: LD/ACAD
Scale: 1 : 50
Checked: -
Date: 2019 / 03 / 04

Title
SHOP FRONT DETAILS

Project No. 19-0301
Drawing No. A-03
Revision C

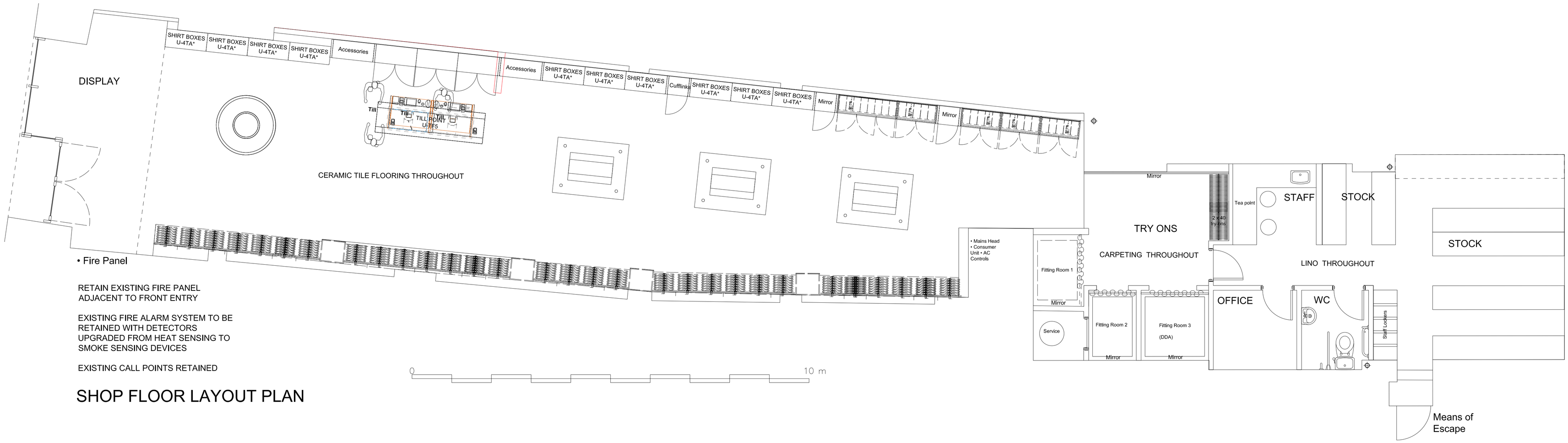

• Fire Panel

RETAIN EXISTING FIRE PANEL
ADJACENT TO FRONT ENTRY

EXISTING FIRE ALARM SYSTEM TO BE
RETAINED WITH DETECTORS
UPGRADED FROM HEAT SENSING TO
SMOKE SENSING DEVICES

EXISTING CALL POINTS RETAINED

SHOP FLOOR LAYOUT PLAN

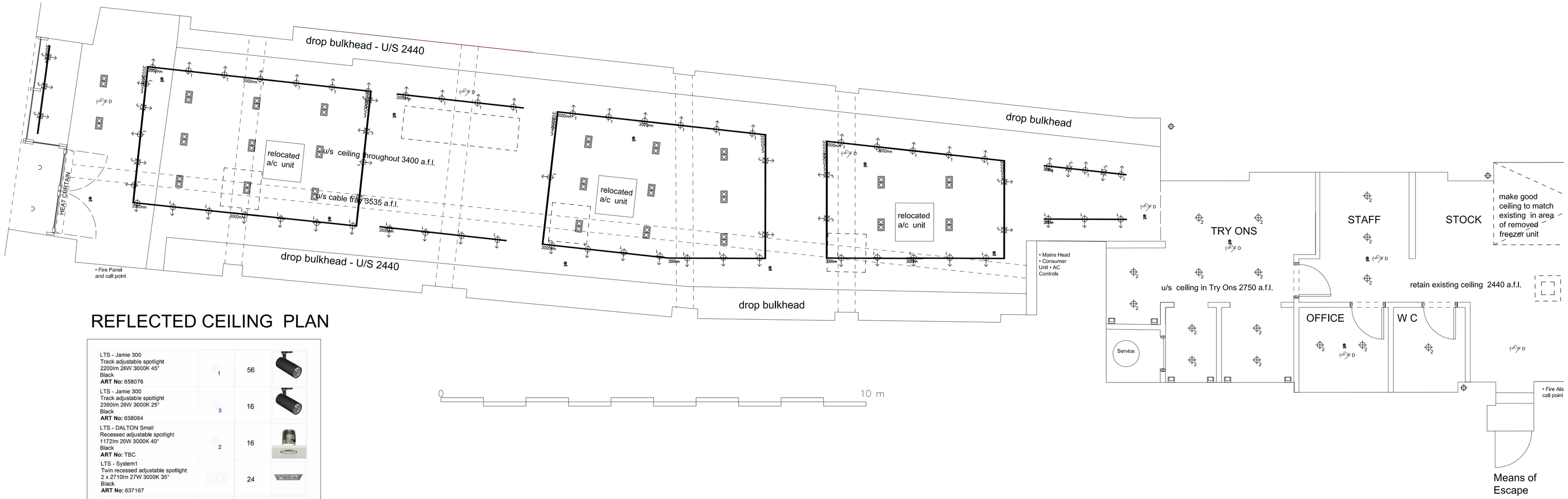

REFLECTED CEILING PLAN

LTS - Jamie 300 Track adjustable spotlight 2200lm 26W 3000K 45° Black **ART No:** 658076	1	56	
LTS - Jamie 300 Track adjustable spotlight 2390lm 26W 3000K 25° Black **ART No:** 658064	3	16	
LTS - DALTON Small Recessed adjustable spotlight 1172lm 20W 3000K 40° Black **ART No:** TBC	2	16	
LTS - System1 Twin recessed adjustable spotlight 2 x 2710lm 27W 3000K 35° Black **ART No:** 637167		24	
EMLED-s5, 99103, 3W Led Emergency, recessed mounted. 104mm diameter. WHITE	●	13	
LTS Onet Recessed Track 3000mm mains voltage 3 circuit lighting track. Black Finish		660322 x 27 - 660328 x 9 660334 x 9 - 660337 x 7 660340 x 9 - 660361 x 81	

No.	Revisions	Date	By
PRE			
C	Issued for Permits	2019-05-30	tf
B	re-issued with revised water point	2019-04-02	tf
A	Issued to landlord for approval	2019-03-28	tf
PRE	Issued to team for comment	2019-03-20	tf

"ALL DRAWINGS, SPECIFICATIONS AND RELATED DOCUMENTS ARE THE COPYRIGHT PROPERTY OF THE ARCHITECT AND MUST BE RETURNED UPON REQUEST. REPRODUCTION OF DRAWINGS, SPECIFICATIONS AND RELATED DOCUMENTS IN PART OR WHOLE IS FORBIDDEN WITHOUT THE ARCHITECT'S WRITTEN PERMISSION."

CONTRACTOR MUST CHECK AND VERIFY ALL DIMENSIONS ON THE JOB, THIS DRAWING SHALL NOT BE USED FOR CONSTRUCTION PURPOSES UNLESS COUNTERSIGNED BY:

Fairlie da Prato / J S L Architects

32 Bloomsbury Street London WC1B 3QJ
T. +44 (0)7940 573 990

Project
Hawes and Curtis

Site Location
52 High Holborn, London

North

Drawn: LD/ACAD
Scale: 1 : 50
Checked: -
Date: 2019 / 03 / 04

Title
SHOP LAYOUT PLAN
& REFLECTED CEILING PLAN

Project No. 19-0301
Drawing No. A-01
Revision C