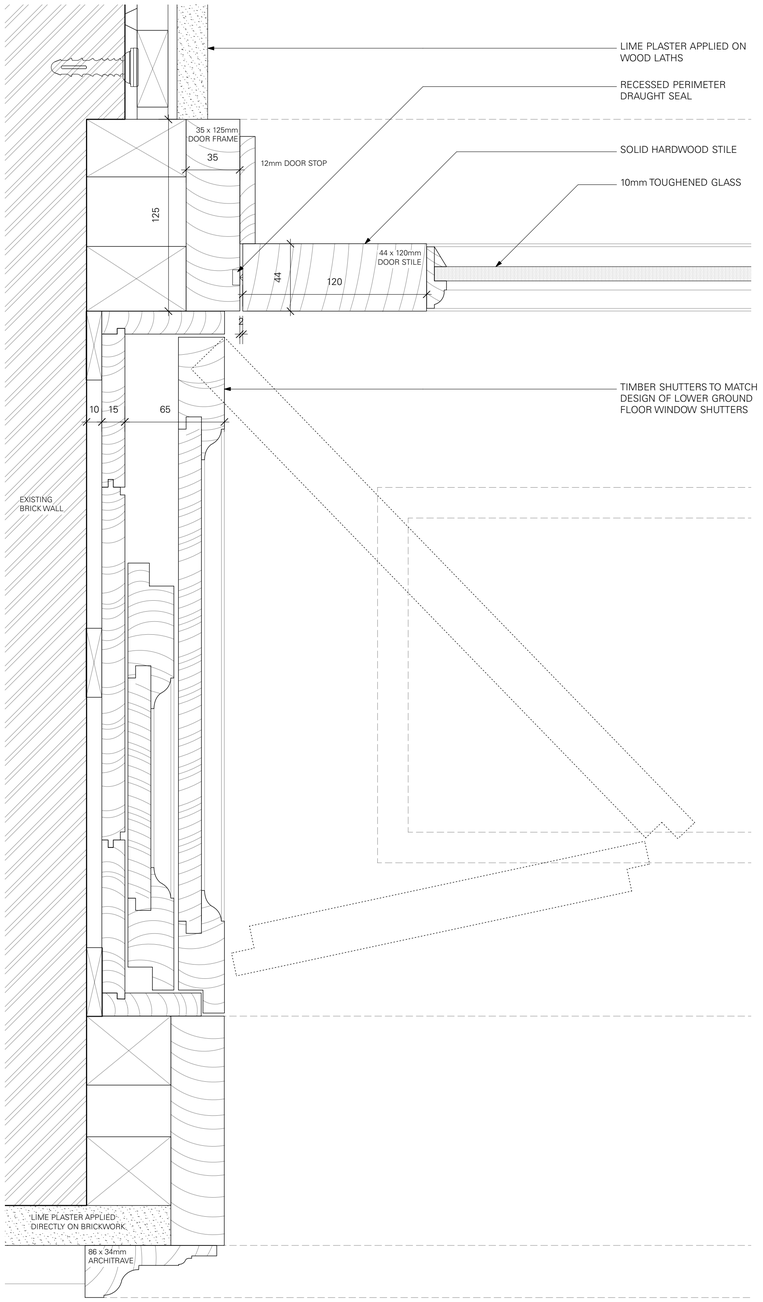

3 DETAIL OF DOOR JAMB @ ABUTMENT WITH WALL
1:2

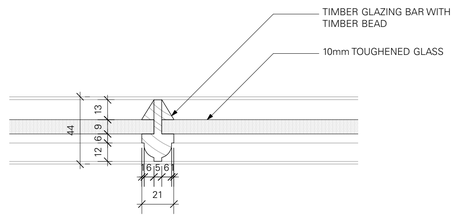

4 DETAIL OF GLAZING BAR
1:2

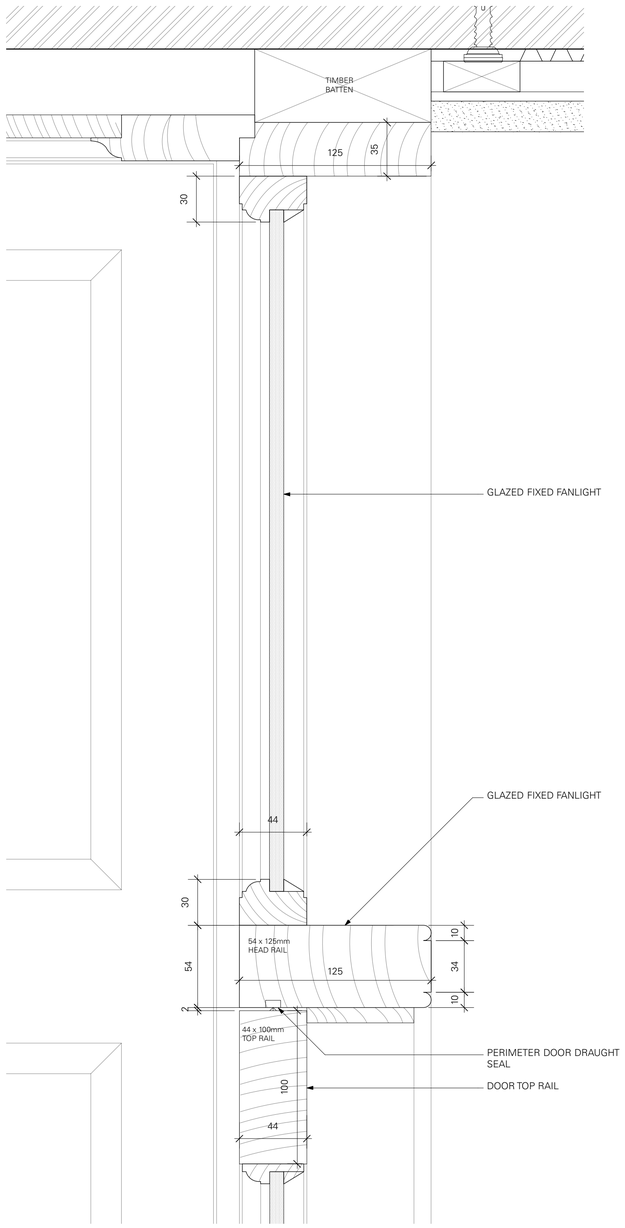

5 HEAD DETAIL OF DOOR AND FANLIGHT
1:2

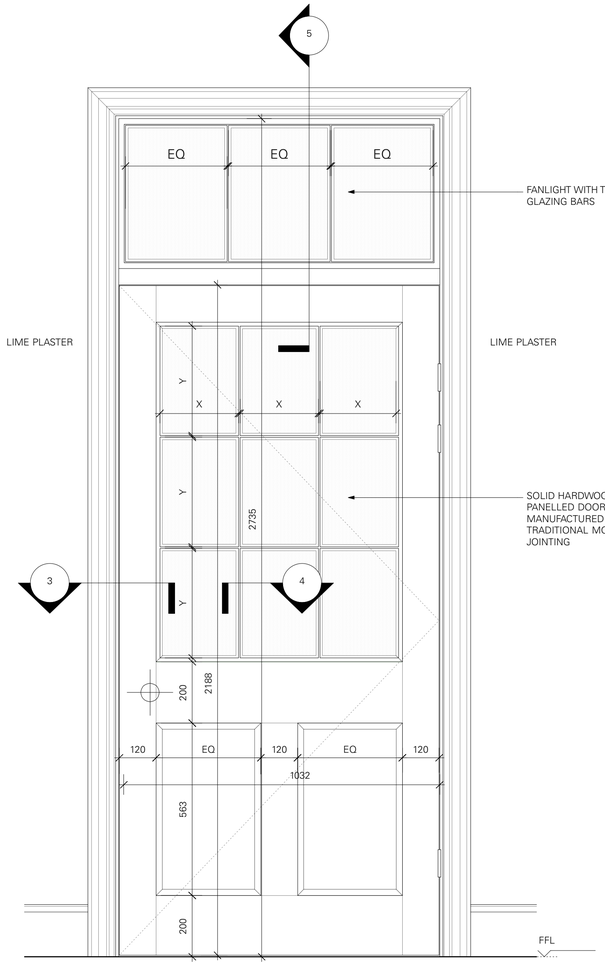

1 ELEVATION DOOR DB.20
1:10

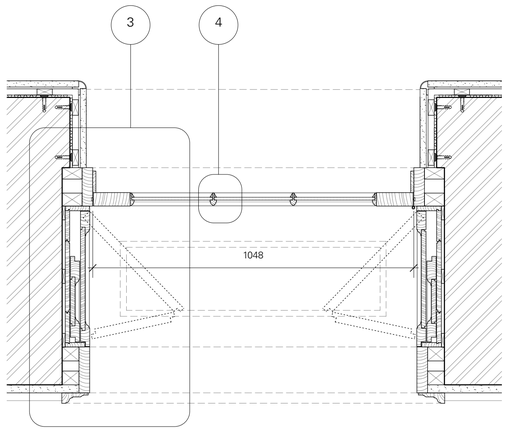

2 PLAN OF DOOR DB.19
1:10

Do not scale working dimensions from this drawing. Read drawings in conjunction with all relevant consultant drawings and specifications. In case of incongruencies between information - consult the architect for final decision. Deviations from these drawings shall not be made without first consulting the architect.

NOTES.

KEY PLAN - LOWER GROUND FLOOR

DRAWN BY / REVISION	DATE	NO.
HC PURSUANT TO PLANNING CONDITIONS	17/05/2019	P0

PLANNING — SCALE. AS SHOWN

DETAILS OF DOOR DB.20

901.8 — SHEET NO. — P0 — REVISION.

33 FITZROY SQUARE
W1T 6EU

263 — JOB NO.

TC A

Thomas Croft Architects
Studio 117, Great Western Studios
65 Alfred Road
London, W2 5EU
United Kingdom

+44 (0)20 8962 0066
email@thomascroft.com
www.thomascroft.com