LEGEND

- ELECTRICAL METER COMPLETE WITH MODBUS METER OUTPUT. DATA CONNECTION & LOGGING TO LANDLORDS SYSTEM.
- 30 WAY DISTRIBUTION BOARD 2J — DISTRIBUTION BOARD MANUFACTURED BY LUCY OR RYEFIELD. 1J & 2J BOARDS TO BE USED FOR THROUGH SUPPLY CONNECTIONS.
- F01 — APARTMENT REFERENCE
- APARTMENT CONSUMER UNIT — REFER TO SPECIFICATION & EQUIPMENT SCHEDULES FOR DISTRIBUTION BOARD, TYPE, SIZE AND PROTECTION BEING USED.
- DB — SPLIT DISTRIBUTION BOARD C/W INTEGRAL DUAL METERS AND MODBUS CONNECTIVITY OR EQUIVALENT PROTOCOL
- DB — DISTRIBUTION BOARD (METERED AT SOURCE)
- SPD — SURGE PROTECTION DEVICE
- MCCB
- HRC SWITCH FUSE
- SWITCH DISCONNECTOR
- SPN — 2P ISOLATOR (SPN OR DC)
- TPN — 4P ISOLATOR (TPN)
- CHANGE-OVER UNIT
- COMMON MAINS SUPPLIES
- NORMAL / PRIMARY LV SUPPLIES
- SECONDARY LV SUPPLIES

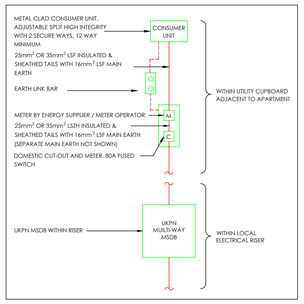

NOTES

1. DO NOT SCALE FROM THIS DRAWING.
2. THIS DRAWING IS TO BE READ IN CONJUNCTION WITH ALL OTHER RELEVANT DRAWINGS AND SPECIFICATIONS ISSUED BY THE ENGINEER.
3. ALL DIMENSIONS TO BE CHECKED ON SITE AND THE ENGINEER NOTIFIED OF ANY DISCREPANCIES PRIOR TO COMMENCEMENT OF WORK.
4. THE POSITION OF ALL EQUIPMENT INDICATED ON THIS DRAWING IS APPROXIMATE. THE EXACT POSITION OF ALL EQUIPMENT TO BE AGREED WITH THE ENGINEER PRIOR TO COMMENCING WORKS.
5. ANY HAZARD IDENTIFICATION ON THIS DRAWING INDICATES ONLY SIGNIFICANT HAZARDS WHICH MAY PROVE TO BE UNUSUAL, UNOBVIOUS OR DIFFICULT-TO-MANAGE BY A COMPETENT CONTRACTOR. THE DESIGN ASSUMES THAT ALL CONTRACTORS ARE COMPETENT AND THAT THEY ARE INSTRUCTED AND CO-ORDINATED BY THE CONTRACTOR IN ORDER TO CO-OPERATE AND IMPLEMENT SAFE WORKING PRACTICES ON SITE. IF IN DOUBT, ASK THE DESIGNER.
6. IF ISSUED IN AN ELECTRONIC FORMAT, IT IS THE RESPONSIBILITY OF THE RECIPIENT TO CHECK THAT THIS DRAWING HAS BEEN REPRODUCED ACCURATELY AND COMPLETELY.
7. ALL WORK SHALL BE CARRIED OUT IN ACCORDANCE WITH LOCAL AND NATIONAL REGULATIONS, NATIONAL AND EUROPEAN STANDARDS AND CODES OF PRACTICE, INCLUDING THE RELEVANT STANDARDS AND GUIDANCE DETAILED IN THE SPECIFICATION.
8. THE TENDER SCHEME DESIGN DRAWINGS PROVIDE INFORMATION RELATING TO DESIGN INTENT SUBJECT TO FURTHER PROPOSALS, CONSULTATION AND DESIGN DEVELOPMENT UNDER THE CONTRACTOR DESIGN. THE CONTRACTOR SHALL PREPARE DETAILED, COORDINATED AND DIMENSIONED WORKING DRAWINGS FOR REVIEW BY THE EMPLOYER PRIOR TO PROCUREMENT OF THE WORKS.
9. THE TENANT SHALL BE ABLE TO ACCESS THE COMMUNAL RISER TO READ THEIR METER OR USE THEIR ENERGY DISPLAY WITHIN THE APARTMENT TO DETERMINE THEIR ENERGY CONSUMPTION.
10. SMART METER TO BE PROVIDED TO READ ENERGY CONSUMPTION WITHIN THE DWELLING.
11. REFER TO PARTICULAR ELECTRICAL SPECIFICATION APPENDIX C FOR ALL DISTRIBUTION BOARD SCHEDULES
12. SECONDARY SUPPLIES DERIVED FROM MAIN INCOMER SUPPLY PER ANNEX G OF BS 9999 (2017). CABLING & DISTRIBUTION IN ACCORDANCE WITH BS8519.
13. WIRING:
    - 13.1. APARTMENT WIRING IN TWIN AND EARTH 6242B LSZH BS 7211 AND BS 6724 ARMOURED XLPE FOR CABLES LARGER THAN 6mm²
    - 13.2. COMMUNAL FINAL CIRCUITS IN BS 8436 SHIELDED CABLE AND BS 6724 ARMOURED XLPE FOR CABLES LARGER THAN 6mm²
    - 13.3. FIRE-RATED FINAL CIRCUITS: CATEGORY 3 TO BS 8519 FP200 PLUS (ENHANCED) OR SIMILAR
    - 13.4. NORMAL SUBMAINS: BS 6724 XLPE/SWA LSZH ARMOURED CABLES
    - 13.5. FIRE-RATED SUBMAINS: CATEGORY 3 TO BS 8519 FP600S OR SIMILAE
14. AOVs SHALL BE CONTROLLED BY LOCAL FIRE/ENVIRONMENTAL AGV CONTROLLERS C/W INTEGRAL BATTERY COMPLIANT WITH BS 9999 SECTION 27.1.5.3 AND EN 12101-10 (CONTROLS) AND EN 12101-2 (AOV)

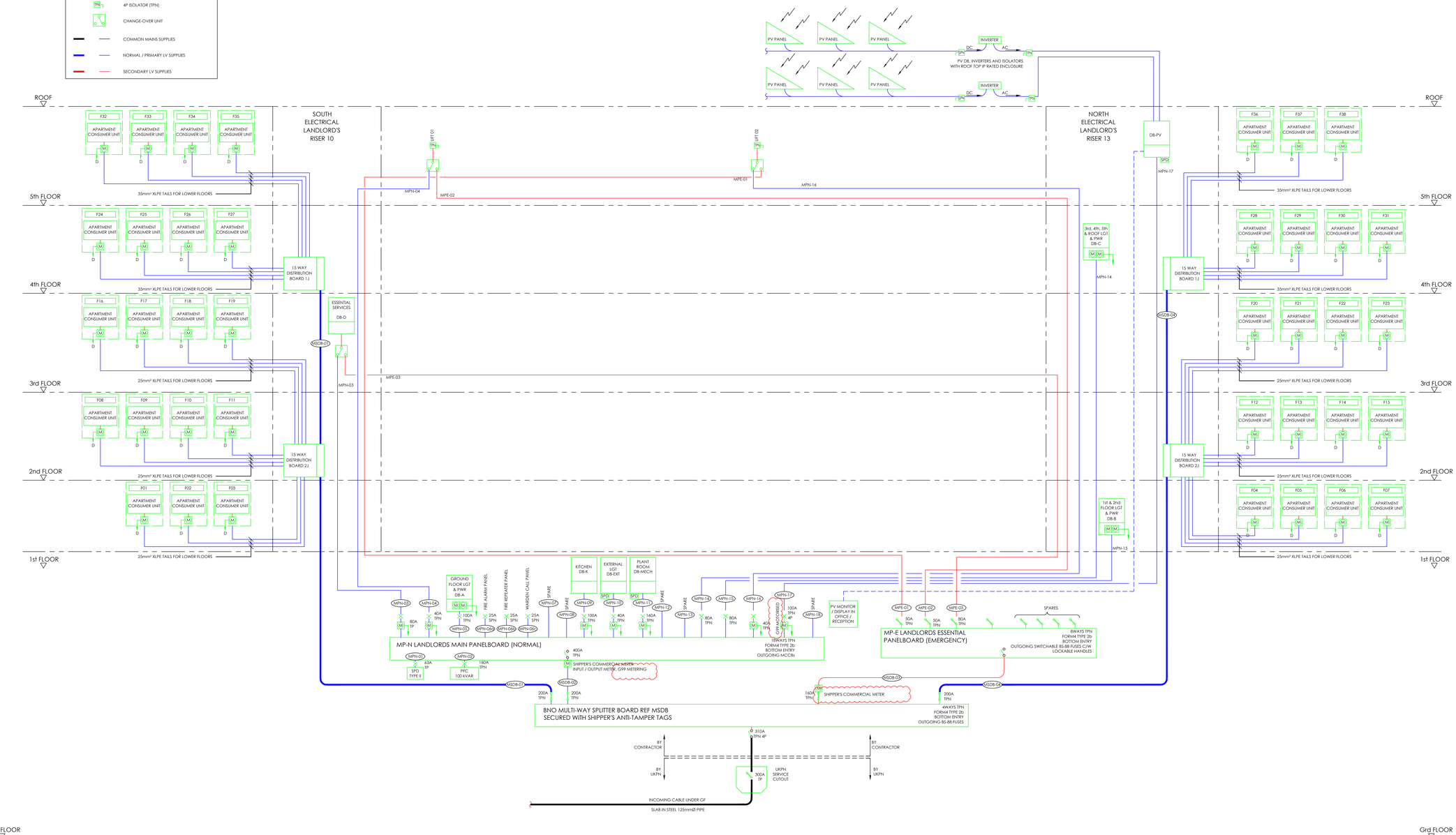

REV	BY	AMENDMENT DESCRIPTION	CHKD	DATE
T2	A.C.	SEE REVISION CLOUDS	T.M.	MAR. 2019
T1	A.C.	TENDER ISSUE	T.M.	JAN. 2019

CLIENT: GALLIFORD TRY PARTNERSHIPS

PROJECT: CHARLIE RATCHFORD, EXTRA CARE CROGSLAND ROAD CAMDEN, LONDON

TITLE: LV SCHEMATIC

nifes Consulting Group

DRAWN	A.C.	CAD	A.C.
CHECKED	T.M.	APPROVED	D.McN.
SCALE	N.T.S. @ A0	DATE	JAN. 2019
DRAWING No.	20552-E-100	REVISION	T2

TENDER

PMG Location : P:\1. Jobs\20500 to 20599\20552 CFP - Charlie Ratchford\z-Internal Information\3.Drawings\Elec - Lvl3 Synced By: ACHristopher on 06/03/2019 Plotted By: Andrzej Christopher on 07/03/2019