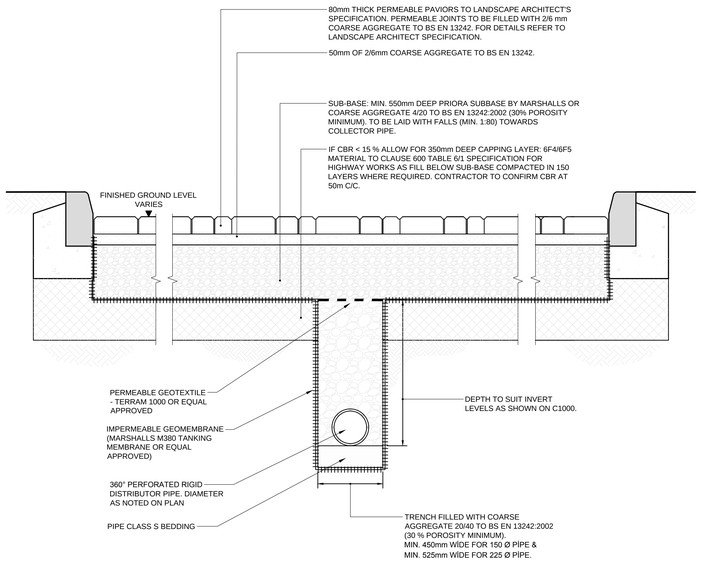

TYPICAL SECTION THROUGH PERMEABLE PAVING & FRENCH DRAIN

(SCALE 1:10)

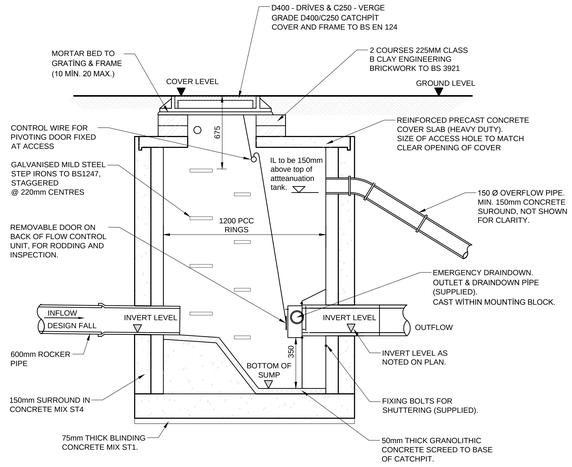

PLAN

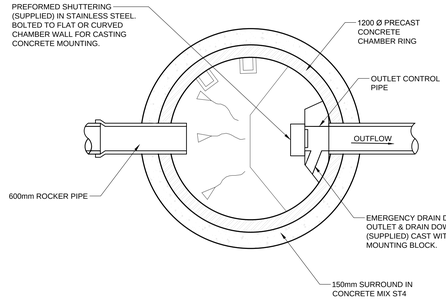

SECTION

1200mm Ø PRIVATE HYDROBRAKE CONTROL CHAMBER

(N.T.S.)

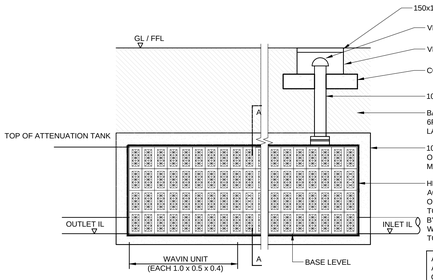

FOR SIZE AND LEVELS REFER TO DRAINAGE LAYOUT C100.

AQUACELL UNITS TO BE LAID PARALLEL HORIZONTALLY AND BONDED LIKE BRICKS VERTICAL IN ORDER TO AVOID CONTINUOUS VERTICAL JOINTS. SINGLE LAYER APPLICATIONS SHOULD BE FIXED USING WAVIN CLIPS AND MULTI LAYER APPLICATIONS SHOULD BE FIXED USING SHEAR CONNECTORS AND CLIPS'. ALL TO BE INSTALLED IN ACCORDANCE WITH MANUFACTURER'S RECOMMENDATIONS.

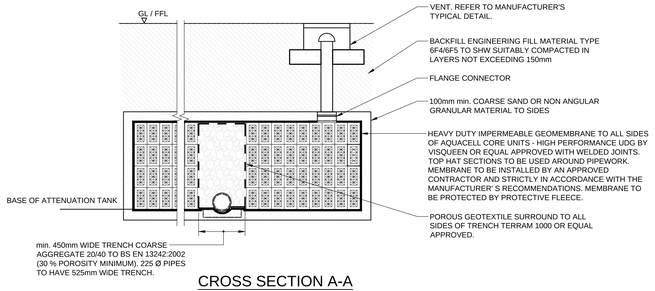

CROSS SECTION A-A

TYPICAL STORM WATER ATTENUATION TANK DETAIL

SCALE NTS

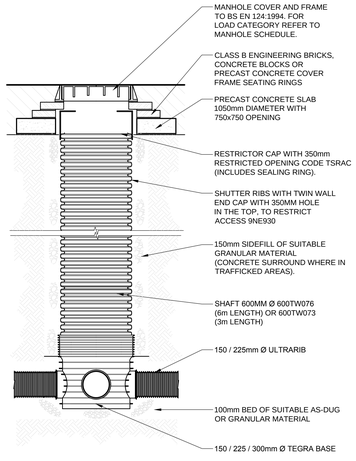

TYPICAL 600Ø PPIC INSPECTION CHAMBER DETAIL 1.2m MAX DEPTH TO INVERT

SCALE 1:20

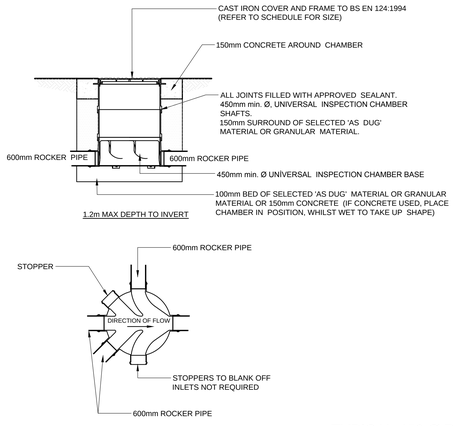

TYPICAL 450 Ø PPIC INSPECTION CHAMBER DETAIL

SCALE 1:20

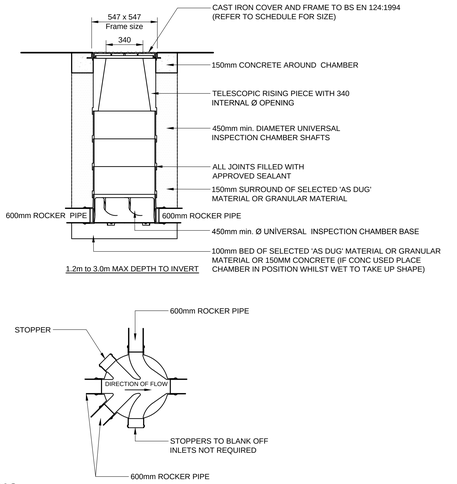

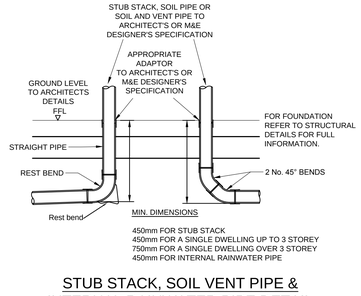

STUB STACK, SOIL VENT PIPE & INTERNAL RAINWATER PIPE DETAIL

SCALE 1:20

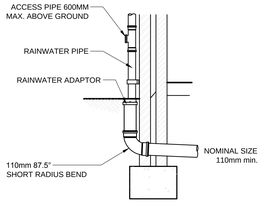

EXTERNAL RAINWATER PIPE TO DRAIN

SCALE 1:20

GENERAL NOTES

1. THIS DRAWING IS TO BE READ IN CONJUNCTION WITH ALL RELEVANT ARCHITECTS, ENGINEERS AND SPECIALIST DRAWINGS AND SPECIFICATIONS
2. DO NOT SCALE FROM THIS DRAWING IN EITHER PAPER OR DIGITAL FORM. USE WRITTEN DIMENSIONS ONLY.
3. ALL DIMENSIONS ARE IN MILLIMETRES UNLESS OTHERWISE NOTED.

GENERAL DRAINAGE NOTES

1. INVERT LEVELS AND POSITIONS OF EXISTING DRAINS / CHAMBERS / SEWERS WHERE NEW CONNECTIONS ARE TO BE MADE MUST BE CHECKED AND CONFIRMED TO THE ENGINEER PRIOR TO THE COMMENCEMENT OF ANY WORKS.
1. ALL DRAINAGE WORKS SHALL BE CARRIED OUT IN ACCORDANCE WITH THE REQUIREMENTS OF THE LOCAL AUTHORITY, THE ENVIRONMENT AGENCY AND IN CONJUNCTION WITH ALL RELEVANT BRITISH STANDARDS, CODES OF PRACTICE AND 'SEWERS FOR ADOPTION' 7TH EDITION AND ANY ADDENDUMS AS APPROPRIATE.
2. ALL DRAINAGE SHALL COMPLY WITH THE TYPICAL DETAILS AND THE REQUIREMENTS OF BS EN 752 AND PART H OF THE BUILDING REGULATIONS.
3. ANY PART OF THE EXISTING DRAINAGE SYSTEM TO BE RETAINED AS PART OF THE NEW SCHEME SHALL BE CLEANED AND INSPECTED. ANY STRUCTURAL DEFECTS SHALL BE REPAIRED USING APPROPRIATE AND APPROVED MEANS.
4. FOR SETTING-OUT DIMENSIONS OF SVP'S, RWP'S ETC, REFER TO ARCHITECT'S OR MECHANICAL ENGINEER'S DRAWINGS. POSITIONS SHOWN ARE INDICATIVE AND SUBJECT TO FINAL DESIGN.
5. ALL FOUL AND RWP CONNECTIONS SHALL BE 100MM DIAMETER UNLESS OTHERWISE SPECIFIED.
6. ALL PRECAST CONCRETE UNITS USED IN THE DRAINAGE WORKS SHALL BE MANUFACTURED USING SULPHATE RESISTING CEMENT.
7. MANHOLE COVERS AND FRAMES SHALL BE TO BS EN 124 AND SHALL BE KITEMARKED. COVERS AND FRAMES SHALL BE HEAVY DUTY D400 IN CARRIAGEWAYS AND VEHICULAR AREAS AND MEDIUM DUTY B125 IN FOOTWAYS AND SOFT LANDSCAPING. IN BLOCKED/CONCRETE PAVED AREAS COVERS SHALL BE RECESSED FABRICATED STEEL. ALL RECESSED COVERS SHALL IN ACCORDANCE WITH THE FACTA ASSOCIATION GRADINGS.
8. ALL INTERNAL INSPECTION CHAMBERS TO BE RECESSED, DOUBLE SEALED WITH SCREW DOWN COVERS.
9. COVER LEVELS ARE TO BE ADJUSTED LOCALLY TO SUIT FINISHED GROUND LEVELS.
10. AT LEAST ONE SOIL PIPE AT THE HEAD OF EACH FOUL RUN SHALL VENT TO THE ATMOSPHERE.
11. EXISTING DRAINAGE TO BE REMOVED IS TO BE BROKEN OUT TO BED LEVEL AND VOID BACKFILLED WITH GRANULAR MATERIAL, COMPACTED IN LAYERS NOT EXCEEDING 250MM.
12. ALL DRAIN RUNS FROM SVP'S, STUB STACKS OR FW GULLIES TO BE LAID AT 1:40 GRADIENT UNLESS OTHERWISE STATED. ALL RWP'S TO BE LAID 1:80 MIN UNLESS OTHERWISE STATED.
13. ALL MANHOLES / INSPECTION CHAMBERS IN BLOCK PAVED AREAS, TO HAVE RECESSED COVERS. MH COVERS IN PAVED AREAS TO HAVE COVER & FRAME ORIENTATED 'SQUARE' WITH PAVING TO MINIMISE CUT SLABS OR BLOCKS.
14. ALL PRIVATE DRAINAGE TO BE LAID TO LEVELS SHOWN USING FLEXIBLY JOINTED PIPES, EITHER UPVC TO BS 4660 AND BS 5481 OR VITRIFIED CLAYWARE TO BS EN 295. PIPES BELOW STRUCTURAL BUILDING SLABS OR BASEMENTS SHALL BE CAST IRON TO BS 437.
15. RODDING EYES, ETC ARE TO BE LAID TO MANUFACTURERS MINIMUM COVER AND DEPTH TO ALLOW ADEQUATE FALL FROM ADJOINING UNIT.
16. ALL PROPOSED TREES TO HAVE APPROPRIATE TREE BARRIER DETAILS LINKING PITS TO ENSURE ROOTS ARE DIRECTED AWAY FROM DRAINAGE.
17. WHERE NEW SEWERS ARE CONSTRUCTED WITHIN 5M OF A NEW OR EXISTING TREE THE SEWER SHALL BE CONCRETE ENCASED AGAINST ROOT INTRUSION. REFER TO DRAINAGE DETAILS.
18. ALL NEW DRAINAGE TO BE JETTED AND CCTV SURVEYED ON COMPLETION. CONTRACTOR TO MAKE SURE THAT THE DRAINAGE IS FULLY OPERATIONAL. REFER TO DRAINAGE MAINTENANCE MANUAL FOR MAINTENANCE DETAILS.
19. ALL RUNS CONNECTING INTO THE PUBLIC DRAINAGE NETWORK TO BE VITRIFIED CLAY, EXTRA LENGTH TO BS EN 295 OR BS65 WITH PLAIN SLEEVED OR SOCKETED FLEXIBLE JOINTS.
20. CDM NOTE: ALL PIPEWORK, SILT TRAPS, CATCHPITS, TRAPPED GULLIES AND ATTENUATION TANKS TO BE REGULARLY INSPECTED EVERY THREE MONTHS AND CLEARED OUT ON A REGULAR FREQUENCY FOR THE FIRST NINE MONTHS. AFTER THIS PERIOD THE FREQUENCY CAN BE REDUCED TO EVERY SIX MONTHS. POROUS SURFACE TO BE REGULARLY SWEPT THREE TIMES A YEAR TO REMOVE THE SILT.
21. THIS DRAWING IS TO BE READ IN CONJUNCTION WITH ALL RELEVANT CONISBEE DRAWINGS.
22. HEALTH AND SAFETY: THE WORKS SHALL BE CARRIED OUT BY SPECIALIST COMPETENT AND EXPERIENCED CONTRACTORS WHO ARE MEMBERS OF A RECOGNISED NATIONAL ORGANISATION.OPERATIVES SHALL HAVE RECEIVED FULL AND APPROPRIATE TRAINING FOR THE OPERATIONS THEY ARE TO UNDERTAKE. ALL WORK SHALL BE CARRIED OUT IN ACCORDANCE WITH ALL PERTINENT HEALTH AND SAFETY REGULATIONS.

DRAINAGE DETAIL NOTES

1. CDM NOTE: ALL PIPEWORK, SILT TRAPS, CATCHPITS, TRAPPED GULLIES, ATTENUATION TANKS AND PUMP CHAMBERS TO BE REGULARLY INSPECTED EVERY THREE MONTHS AND CLEARED OUT ON A REGULAR FREQUENCY FOR THE FIRST NINE MONTHS. AFTER THIS PERIOD THE FREQUENCY CAN BE REDUCED TO EVERY SIX MONTHS. PUMP SETS TO BE INSPECTED AND MAINTAINED IN ACCORDANCE WITH THE RECOMMENDATIONS OF THE MANUFACTURER/PUMP PROVIDER. POROUS SURFACE TO BE REGULARLY SWEPT THREE TIMES A YEAR TO REMOVE THE SILT. GREASE TRAPS/INTERCEPTORS ARE TO BE INSTECTED/EMPTIED AT LEAST ONCE A MOTH AND, PREFERABLY, EVERY TWO WEEKS.
2. HEALTH AND SAFETY: THE WORKS SHALL BE CARRIED OUT BY SPECIALIST COMPETENT AND EXPERIENCED CONTRACTORS WHO ARE MEMBERS OF A RECOGNISED NATIONAL ORGANISATION.OPERATIVES SHALL HAVE RECEIVED FULL AND APPROPRIATE TRAINING FOR THE OPERATIONS THEY ARE TO UNDERTAKE. ALL WORK SHALL BE CARRIED OUT IN ACCORDANCE WITH ALL PERTINENT HEALTH AND SAFETY REGULATIONS.
3. REFER TO THE MANUFACTURER'S INSTALLATION GUIDANCE FOR ALL SPECIFIED PRODUCTS.

NOT FOR CONSTRUCTION

Rev	Date	Description	Drawn	Check
P1	12.04.19	ISSUED FOR COMMENTS.	CN	AC

conisbee | Consulting Structural Engineers, Consulting Civil Engineers
London • Cambridge • Norwich
1-5 Offord St London N1 1DH
Telephone 020 7700 6666
www.conisbee.co.uk

Drawing Status: PRELIMINARY

Project: WHITESTONE HOUSE, WHITESTONE LANE, NW3 1EA

Title: STANDARD DRAINAGE DETAILS

Date: APR 2019
Scale: AS SHOWN@A0
Drawn: CN
Engineer: CN
Project No: **190015**

Drawing No: **190015-CON-X-00-DR-C-1300**
Revision: **P1**