Drawing Number:
2777-RW-M-021

DO NOT SCALE

DRAWING LEGEND
- EXISTING GAS SERVICE PIPE
- NEW MAINS WATER PIPE
- NEW HEATING FLOW & RETURN PIPE

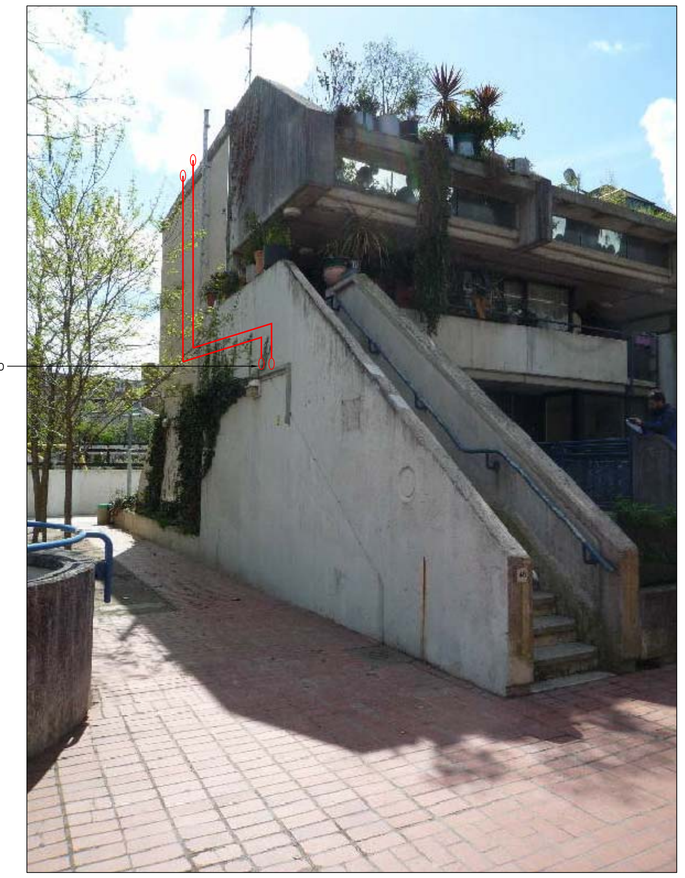

PROPOSED HTG PIPE
DISTRIBUTION TO SERVE UPPER
AND LOWER MAISONETTES OF
BLOCKS B1, B2 & B3 (TYPICAL)

PROPOSED HTG PIPE
DISTRIBUTION TO SERVE UPPER
AND LOWER MAISONETTES OF
BLOCKS B1, B2 & B3 (TYPICAL)

Key Plan

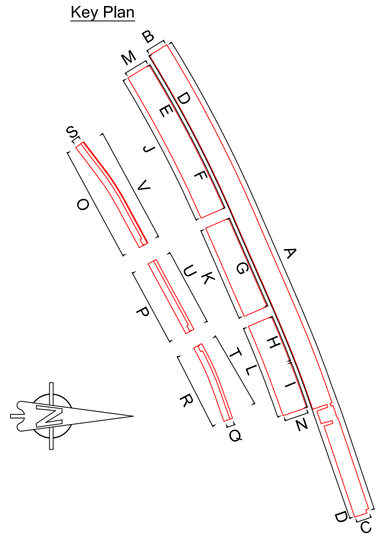

PLANNING DRAWING

Client

Camden

ARGYLE STREET
LONDON
WC1H 8NJ

BYA BUTLER & YOUNG ASSOCIATES
Mechanical and Electrical Consulting Engineers
1st Floor, 54-62 Station Road East, Oxted, Surrey RH8 0PG
Telephone 01883 717172 Fax 01883 717174
Website www.bya.co.uk Email enquiries@bya.co.uk

Project
ALEXANDRA ROAD ESTATE
(ROWLEY WAY)

Drawing Title
PROPOSED REPLACEMENT HTG & DOM WATER SERVICES PIPE ROUTE TO EXTERNAL ELEVATION OF DWELLINGS (B1-B3)
SHEET 2 OF 2

Scales NTS	Xref: -	Drwg Sheet A0
Drawn NS	Checked JS	Date MAY 18
BYA Ref: 2777	Drawing Number: 2777-RW-M-021	REV:
BYA Cad Ref: 2777-RW-M-021		