DO NOT SCALE

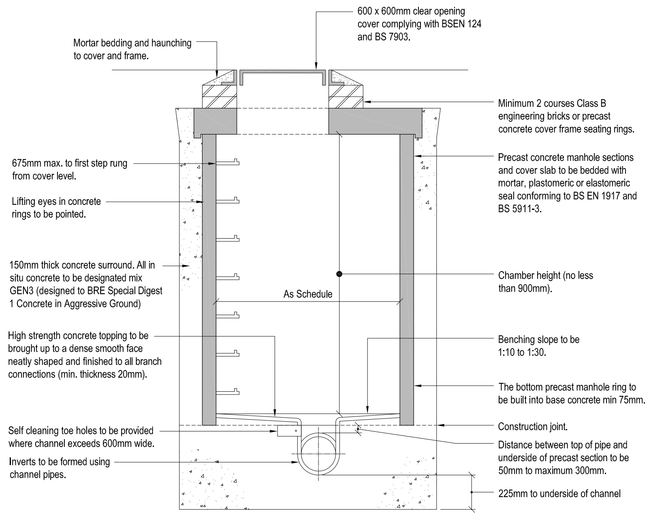

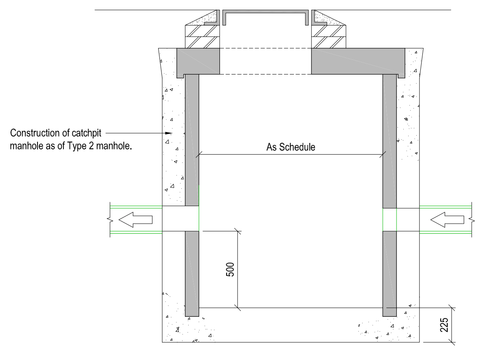

Typical Catchpit Detail - Type 2 (1:20)
(Max depth from cover level to soffit of pipe of 3.0m)
Manhole construction shall comply with Sewers for Adoption 7th Edition

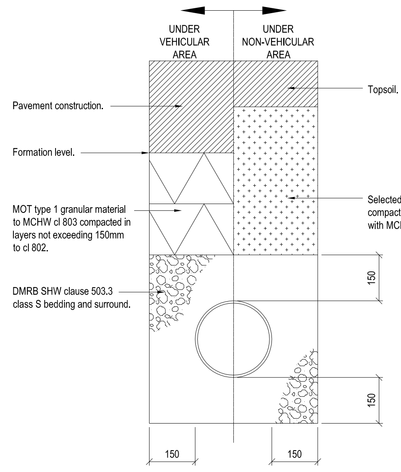

Class S granular pipe bed and surround
To be used for plastic, vitrified and concrete pipework where cover to crown is greater than 900mm.

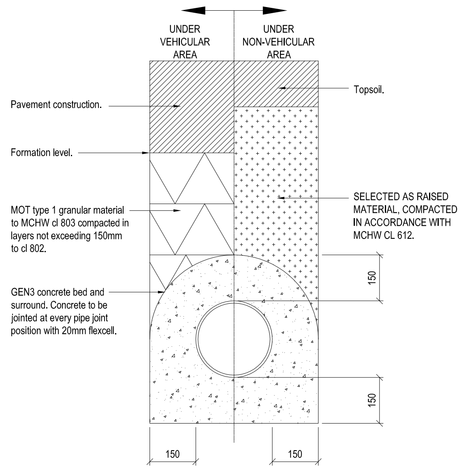

Class Z granular pipe bed and surround
To be used for plastic, vitrified and concrete pipework where cover to crown is less than 900mm.

Pipe Bedding Details (1:10)

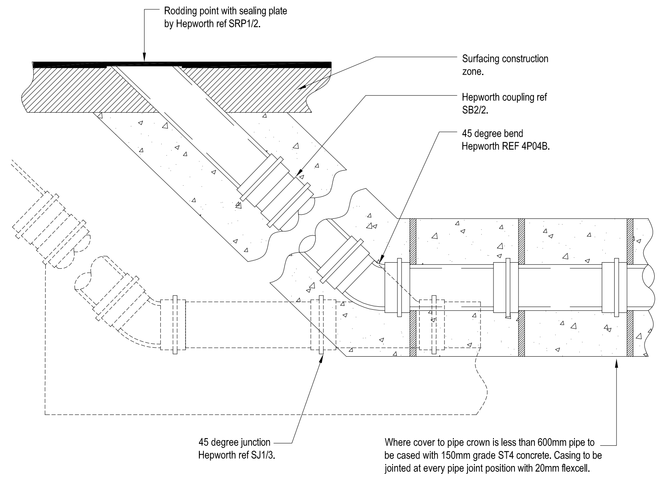

Rodding Eye Detail at Head of Run/On Branch Drain (1:10)

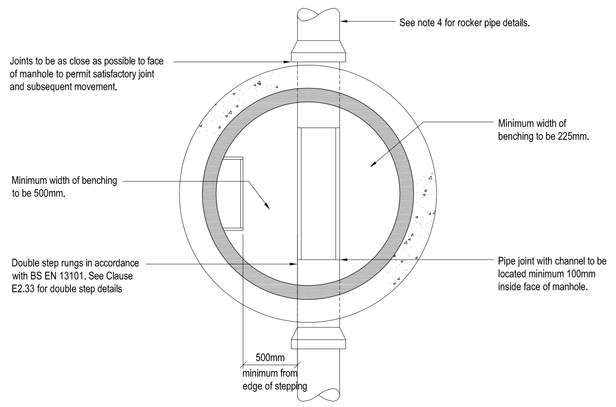

Typical Manhole Detail - Type 2 (1:20)
(Max depth from cover level to soffit of pipe of 3.0m)
Manhole construction shall comply with Sewers for Adoption 7th Edition

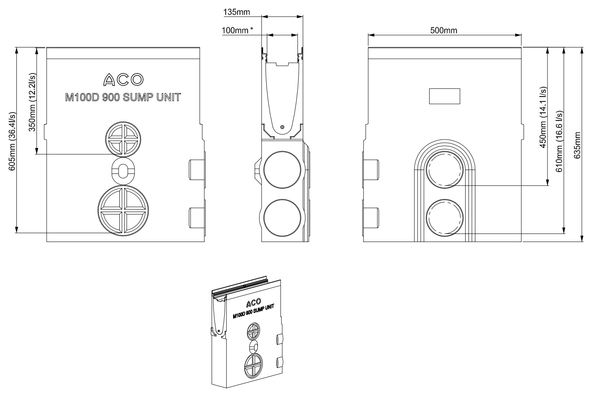

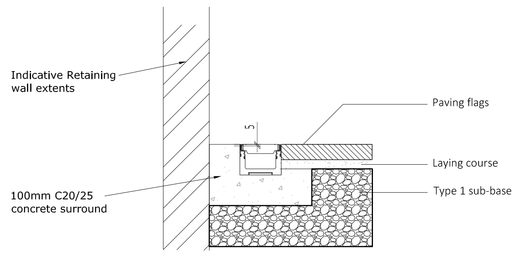

M100D SHALLOW DEPTH CHANNEL DETAIL (1:10)
(load class B125)

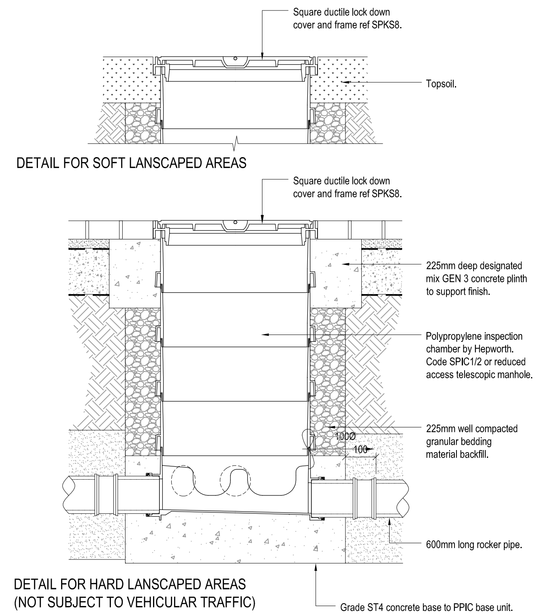

Typical Hepworth PPIC Manhole Detail (1:10)

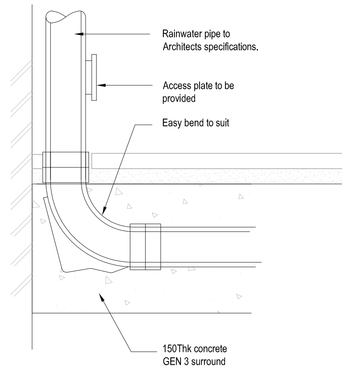

RWP Detail (1:10)

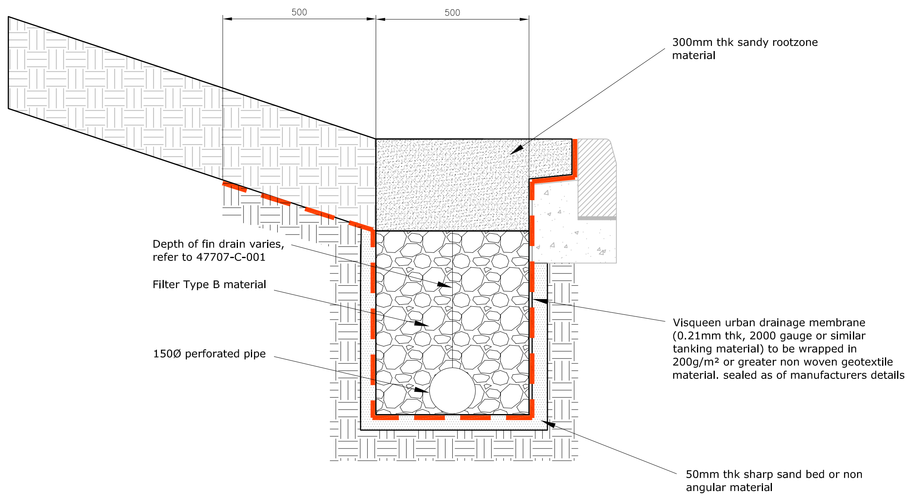

SECTION C–C TYPICAL LINEAR CHANNEL DRAIN (1:10)

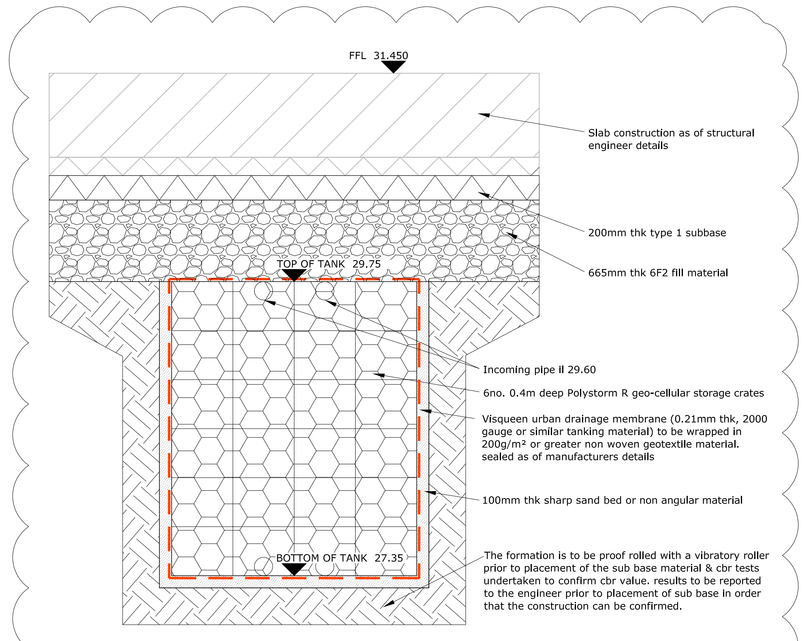

SECTION B–B UNDERGROUND GEO–CELLULAR TANK ARRANGEMENT (1:25)

DETAIL TO BE CONFIRMED WITH POLYPIPE

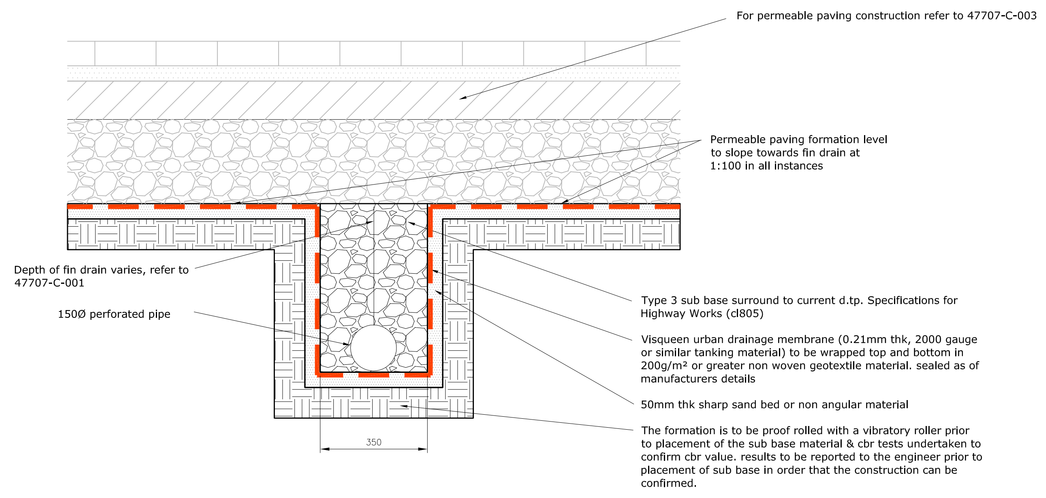

SECTION A–A TYPICAL PERMEBALE PIPE (FIN DRAIN) UNDER PERMEABLE PAVING (1:10)

REV	DATE	DESCRIPTION	DRAWN	CHKD
P1	09/11/18	ISSUED FOR TENDER	K.S.	A.S.

REVISIONS

This drawing is to be read in conjunction with all other Engineer's drawings and all other project information. Any discrepancy between the Engineer's drawings and other project information is to be reported to the Engineer immediately.

Project
CHARLIE RATCHFORD EXTRA CARE

Title
DRAINAGE DETAILS

Client
GALLIFORD TRY PARTNERSHIPS

Scale	Drawn	Date
AS SHOWN	D.M	09/11/18
Job Manager	Checked	Approved
A.L.S	D.M	D.M

RichardJackson Engineering Consultants
847 The Crescent, Colchester, Essex CO4 9YQ — Tel: 01206 228800
3rd Floor, Rennie House, 37-60 Aldgate High Street, London EC3N 1AL — Tel: 020 7448 9910
5 Quern House, Mill Court, Great Shelford, Cambs CB22 5LD — Tel: 01223 314794
4 The Old Church, St. Matthews Road, Norwich, Norfolk NR1 1SP — Tel: 01603 230240
The Wheelhouse, Bonds Mill, Stonehouse, Gloucestershire GL10 3RF — Tel: 01172 020070
Email Address: mail@rjuk.com — Website: http://www.rjuk.com

Drawing No.	Revision
47707-C-003	A

Drawing Status
☐ INFORMATION ☐ APPROVAL ☐ COSTING
☒ TENDER ☐ CONSTRUCTION ☐ AS CONSTRUCTED

A0

© Richard Jackson Ltd