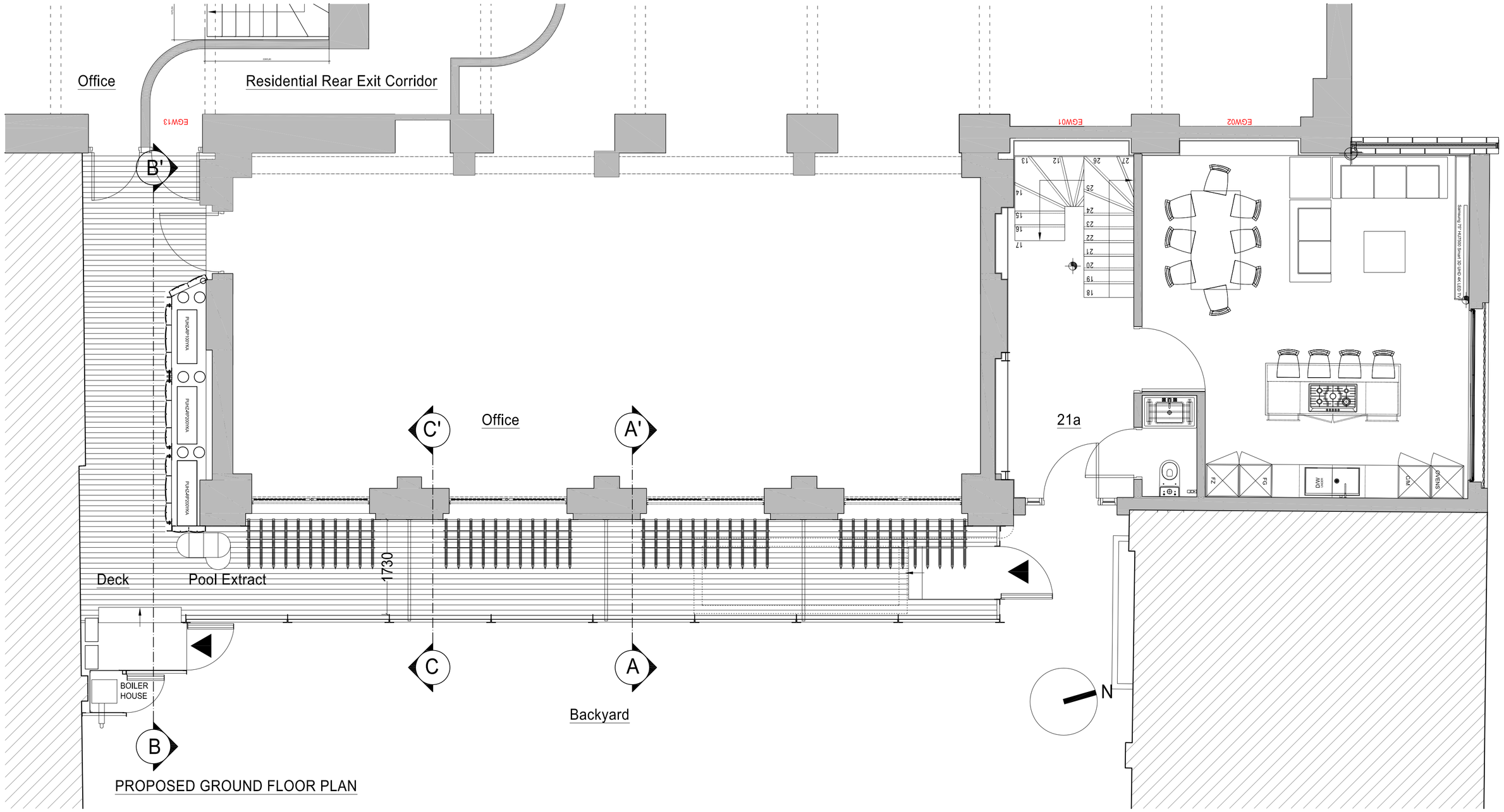

PROPOSED GROUND FLOOR PLAN

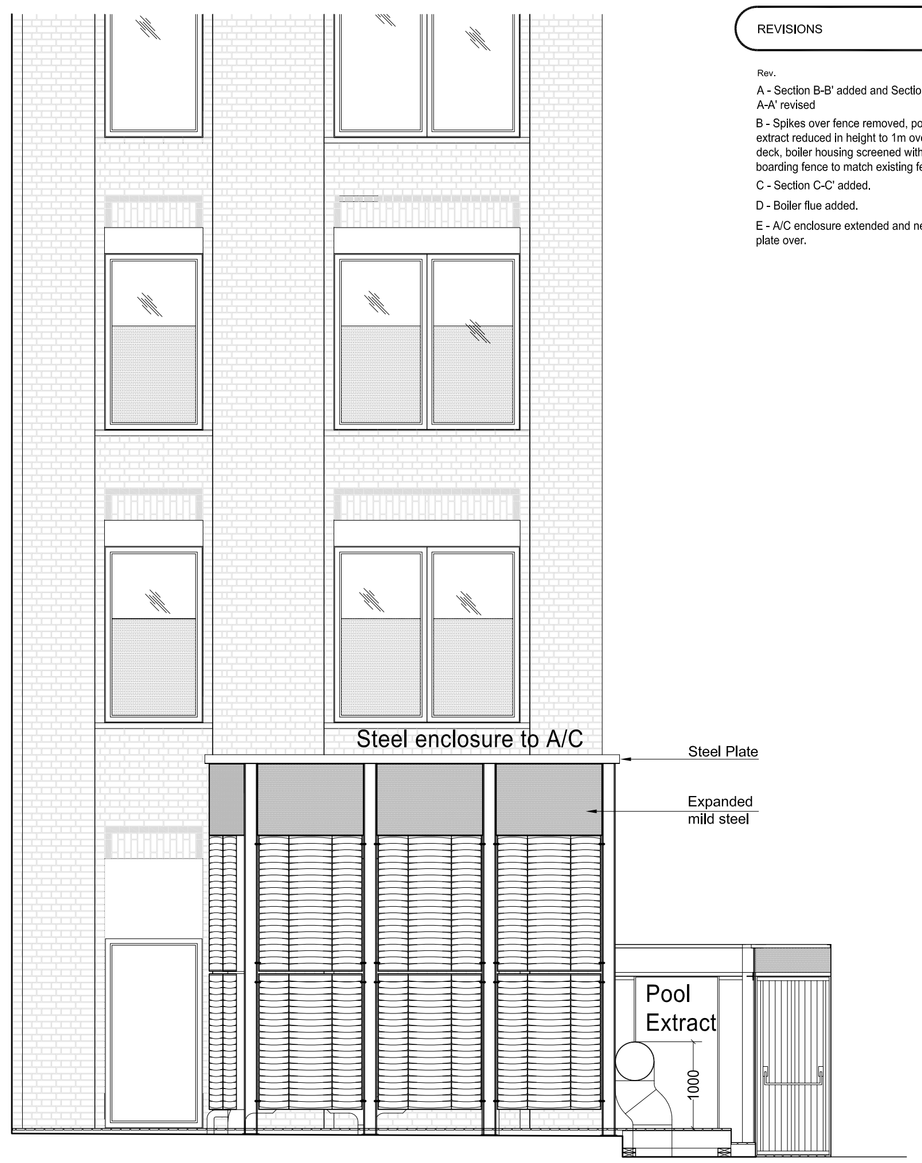

PROPOSED B-B' SECTION

REVISIONS

Rev.		Date	By
A	Section B-B' added and Section A-A' revised	08/05/18	LV
B	Spikes over fence removed, pool extract reduced in height to 1m over the deck, boiler housing screened with close boarding fence to match existing fencing.	19/10/18	LV
C	Section C-C' added.	22/10/18	LV
D	Boiler flue added.	22/10/18	LV
E	A/C enclosure extended and new steel plate over.	30/10/18	LV

EAST ELEVATION

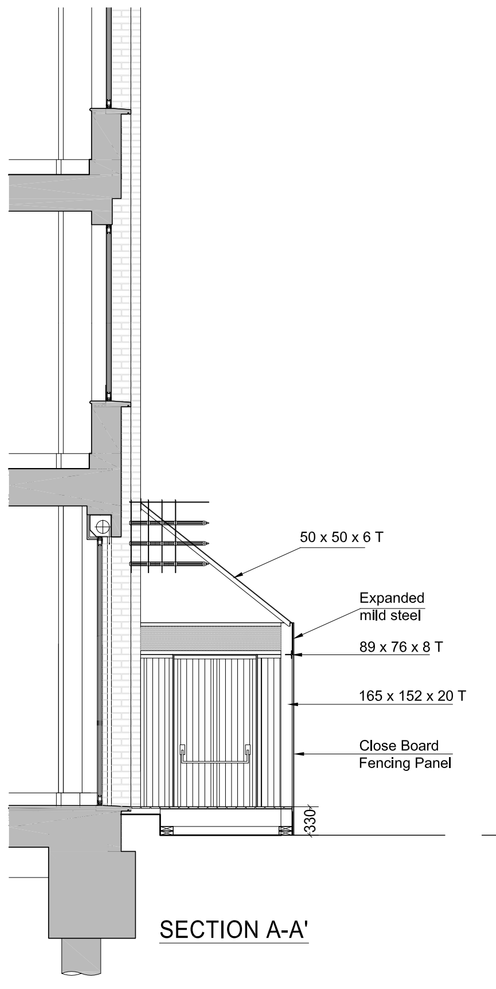

SECTION A-A'

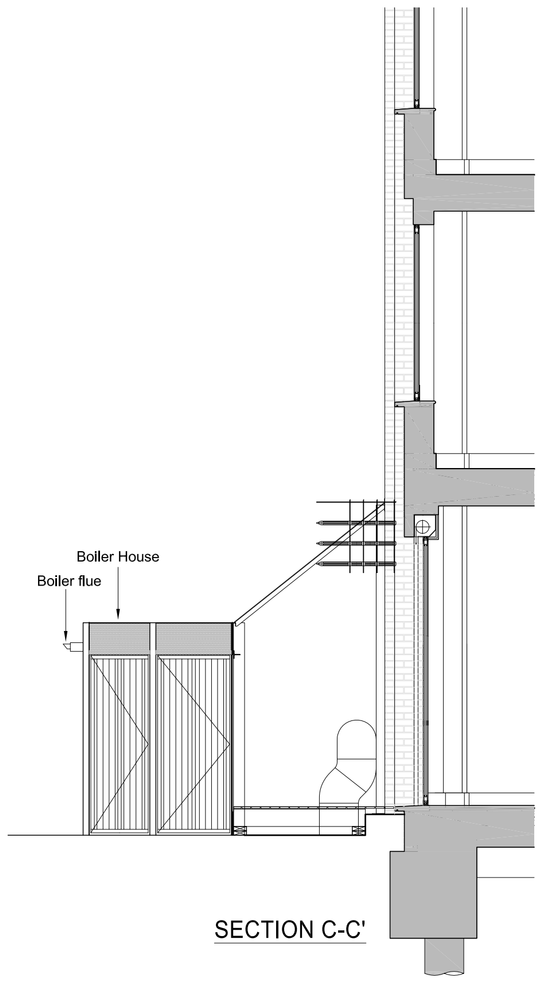

SECTION C-C'

0 1 2 3 4 5 10m

PLANNING APPLICATION

ALL DIMENSIONS TO BE CHECKED ON SITE
WORK TO FIGURED DIMENSIONS ONLY
REPORT DISCREPANCIES TO THE ARCHITECT
AT ONCE BEFORE PROCEEDING

Contemporary Design Solutions

46 Great Marlborough Street
London
W1F 7JW
Telephone: 020 7494 9000 Fax: 020 7494 4944

Client

RISETALL LTD

Project Title

Backyard Fence
10A Belmont Street,
LONDON NW1

Drawing Title

Proposed Backyard Fence

Scale	1: 50@A1; 100@A3	Date	March 2018
Drawn	LV	Checked	-
Drawing No.			Rev.
180330-A(90)001			E

DRAWING LOCATION - F:\01 HALLMARK-PROJECTS\180330 - 10A BELMONT ST - BACKYARD FENCE\06 DESIGN\01 CAD\SHEETS\PLANNING APPLICATION\270318\180330-A(90)001_BACKYARD_FENCE_REVE.DWG

PLOT DATE - 10/30/2018 8:32 AM