A1 SHEET

NOTE:
THIS DRAWING HAS BEEN PRODUCED BY ELECTRONIC MEANS. SHOULD THE SCALE MEASUREMENTS BE TAKEN BY MEANS OTHER THAN ELECTRONIC (e.g. FROM A PRINTED COPY), THE FOLLOWING MUST BE TAKEN INTO CONSIDERATION BEFORE SCALING IS UNDERTAKEN:
1. ENSURE THAT THE COPY HAS BEEN PRINTED/PLOTTED ON THE STATED SHEET SIZE WITH THE PLOTTING SCALE SET TO A CORRECT RATIO.
2. ENSURE THAT AN ADEQUATE ALLOWANCE (DEPENDANT ON THE STATED SCALE) IS MADE FOR THE INEVITABLE DISTORTIONS INTRODUCED BY PLOTTING/PRINTING AND COPYING PROCESSES.
3. MARKED CRITICAL DIMENSIONS ARE TO BE REGARDED AS HAVING PRECEDENCE OVER THE SCALED VALUES.

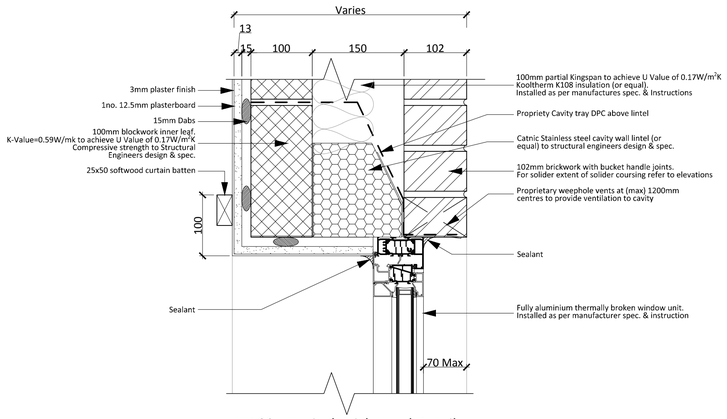

WI102 - Typical Brick Head Detail
1 : 5

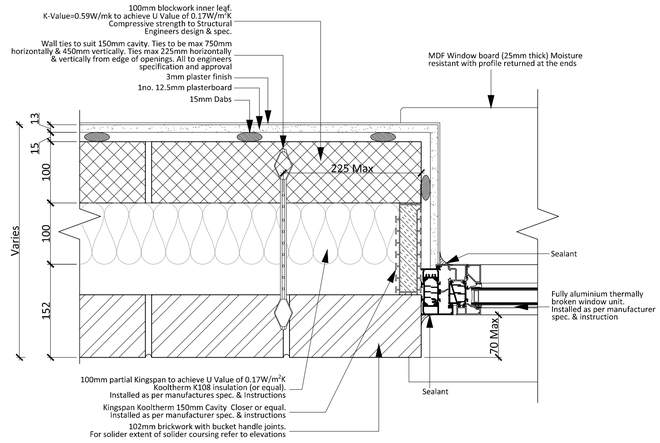

WI103 - Typical Window Jamb Detail
1 : 5

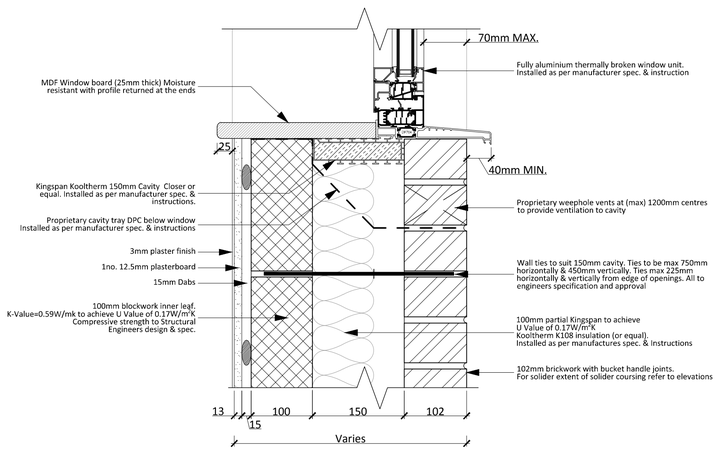

WI101 - Cill Detail (Mews Houses)
1 : 5

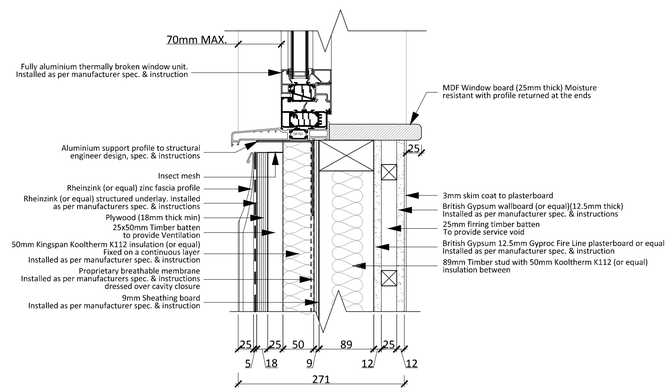

WI104 - Typical Window Cill Detail (Zinc Cladding)
1 : 5

(See RF106 (A(2)510) for head details)

REV	DESCRIPTION	DATE	INIT	CHKD
B	DRAWING UPDATED AS FOLLOWS: detail 104 added	21.05.18	MA	BPH
A	DRAWING UPDATED AS FOLLOWS: Drawing revised to suit comments	05.04.18	MA	BPH

CONSTRUCTION

calfordseaden

Client
Rydon
Project
Ashton Court, Camden Park Road, Camden
Title
Window Details

Scale	Date	Drawn By	Checked By	Project No:		Drawing No:	Revision
1:5@A1	21.12.17	MA	BH	K160423	-	A (2)515	B

St Johns House 1A Knoll Rise Orpington Kent BR6 0JX
01689 888222 orpington@calfordseaden.com

calfordseaden LLP is a Limited Liability Partnership Registered in England & Wales number OC315838

ORPINGTON | LONDON | BIRMINGHAM | CAMBRIDGE | SOUTHEND-ON-SEA | WINCHESTER
calfordseaden.com