NOTES

Copyright: All rights reserved.
This drawing must not be reproduced without permission.
This drawing must not be scaled. Dimensions are in millimetres unless specified.

Internal Partition IP01
K10/125

Min. Acoustic Rating = 58dB performance
Min. Fire Rating = 60 minutes

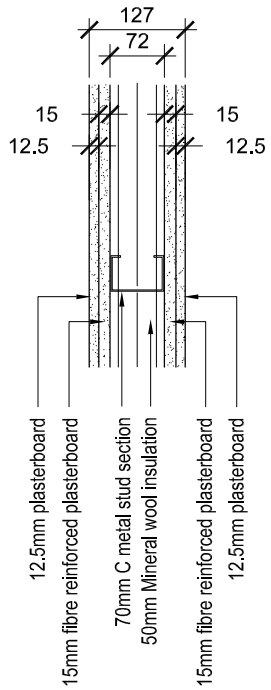

Location: Typical new lobby and classroom partitions;
Note: Timber lining required around door and screen openings.

Internal Partition IP02
K10/126

Min. Acoustic Rating = 45dB performance
Min. Fire Rating = 30 minutes

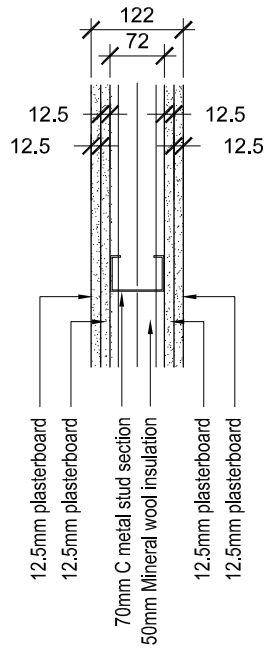

Location: Basement/ office partitions

Internal Partition IP03
K10/ 127

Min. Acoustic Rating = 45dB performance
Min. Fire Rating = n/a

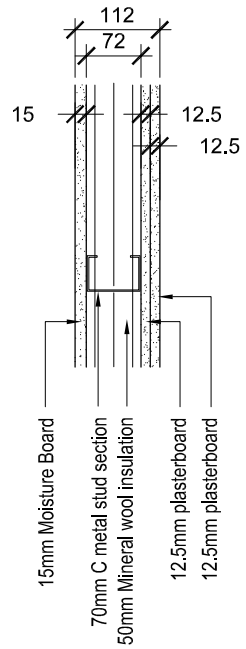

Location: WC/ Shower room partition

Internal Partition IP04
K10/146 - (Dryliner)

Min. Acoustic Rating = 55dB DNTW insitu performance (adjacent habited space)
Min. Fire Rating = 60 minutes total wall buildup

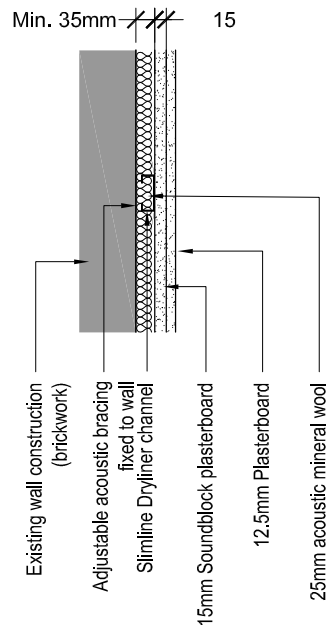

Location: Lining to existing separating wall to No.54, fireplaces.

Internal Partition IP04a
K10/146 - (Dryliner)

Min. Acoustic Rating = 55dB DNTW insitu performance (adjacent habited space)
Min. Fire Rating = 60 minutes total wall buildup

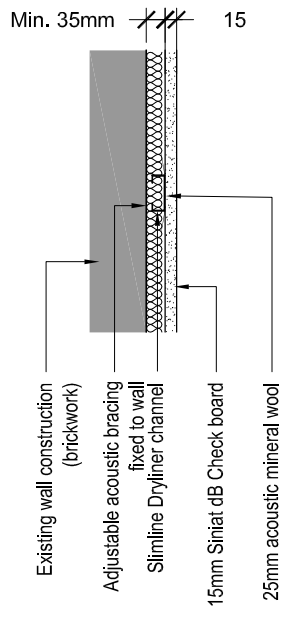

Location: Lining to Fourth Floor Loftspace.

Internal Partition IP05
K10/ 128

Min. Acoustic Rating = 45dB performance
Min. Fire Rating = 30 minutes

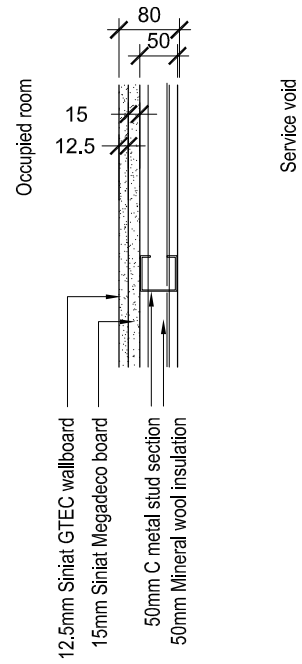

Location:
Encasement to pipework

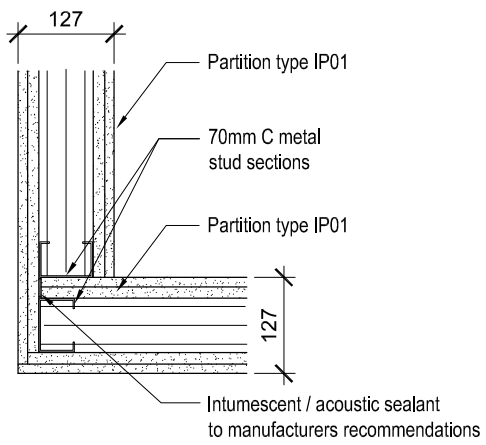

Plan Detail PD01

Partition Type IP01
Typical Corner Detail
(Partition Type IP02 Similar)

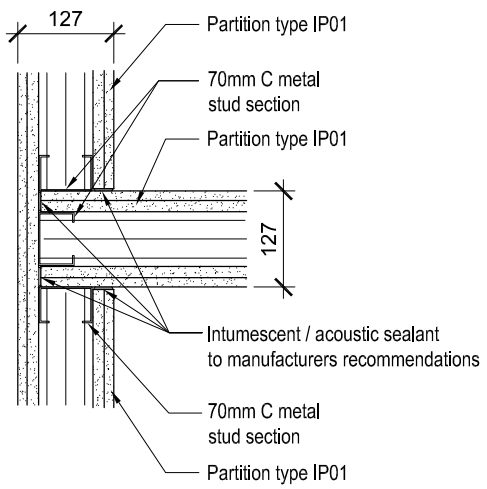

Plan Detail PD02

Partition Type IP01
Typical 'T' Junction Detail
(Partition Type IP02 Similar)

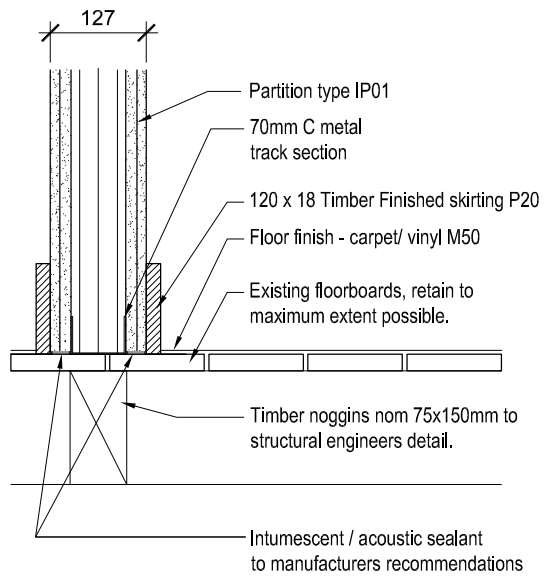

Section Detail PD03

Partition Type IP01
Typical Base Detail
(Partition Type IP02 Similar)

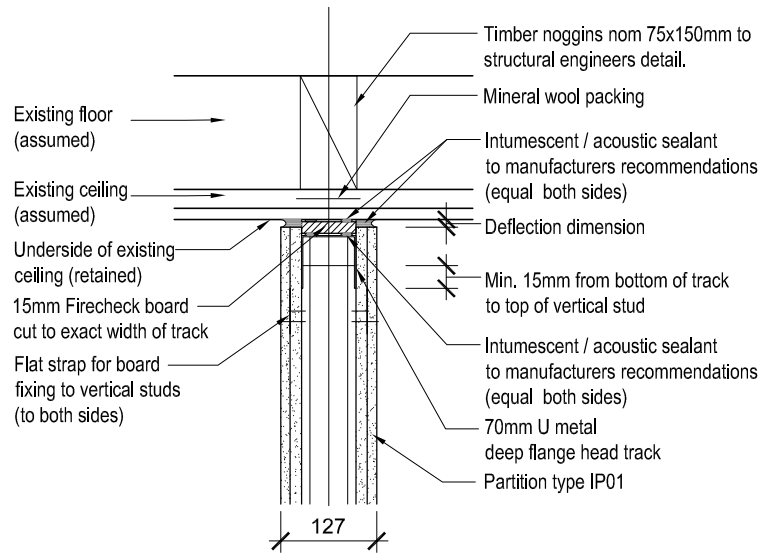

Section Detail PD04

Partition Type IP01
Typical Deflection Head Detail
(Partition Type IP02 Similar)

REV	DATE	REVISION NOTE	BY	CHECK
-	- - -	- - -