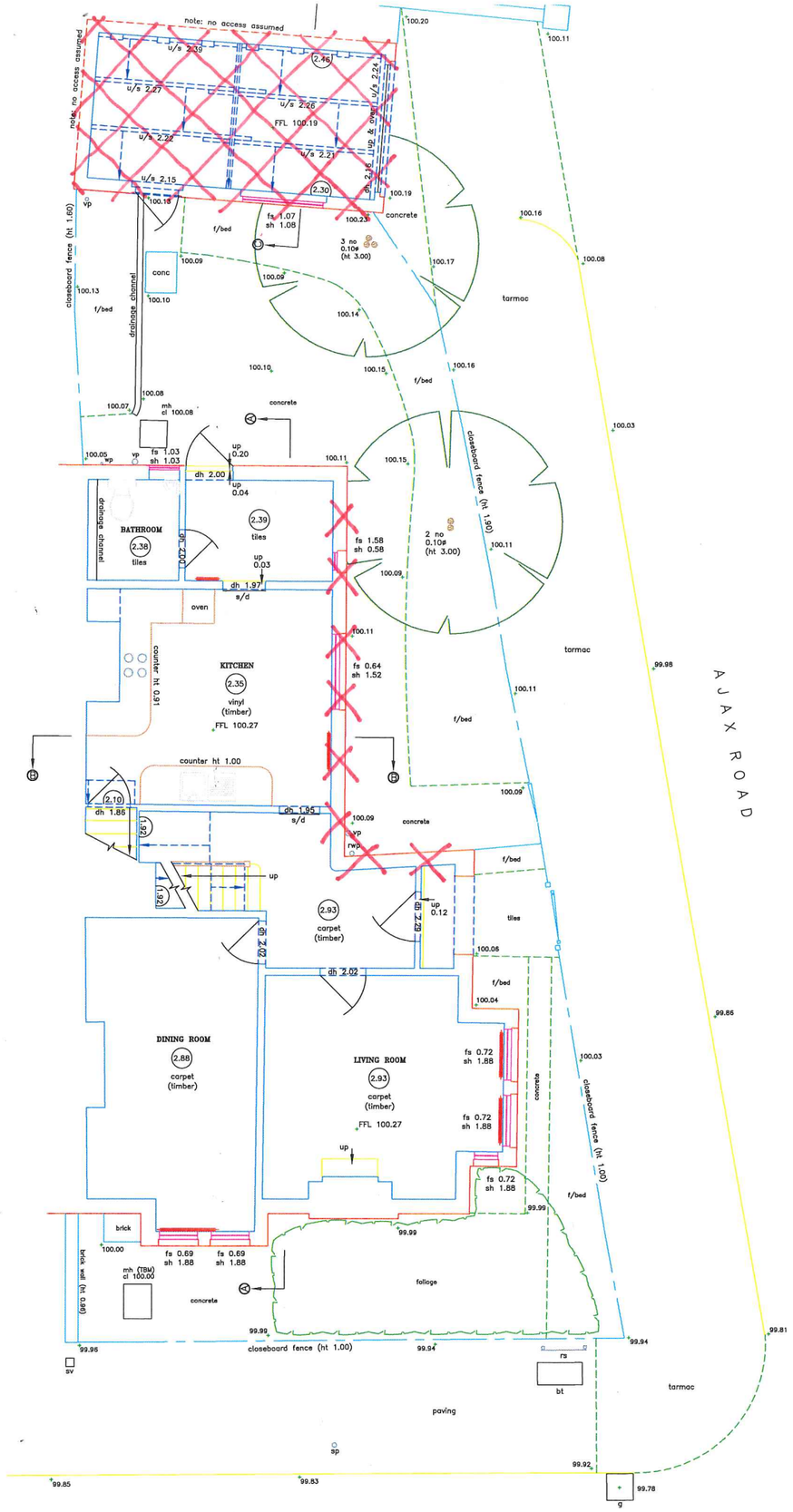

AGAMEMNON ROAD

AJAX ROAD

OVERLAY CROSS

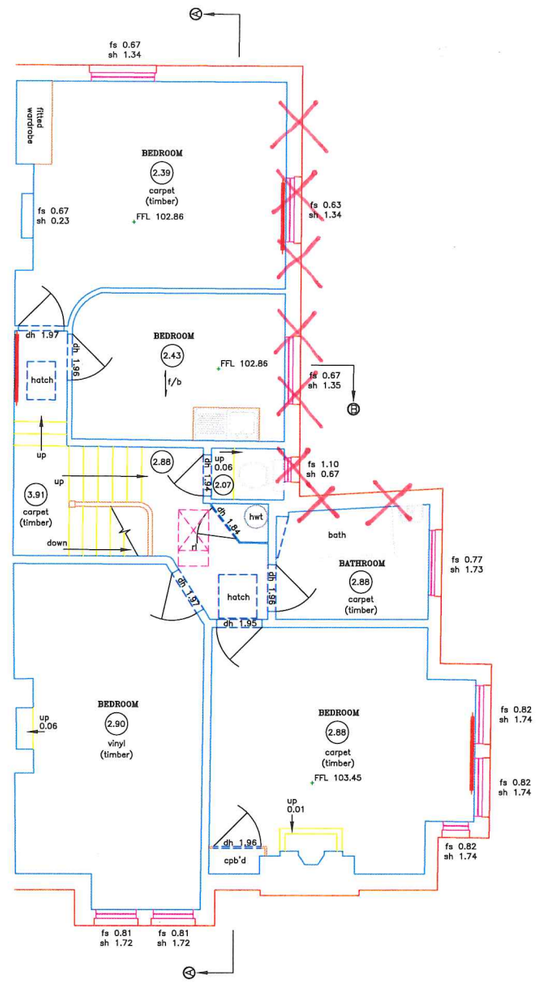

FIRST FLOOR PLAN

OVERLAY CROSS

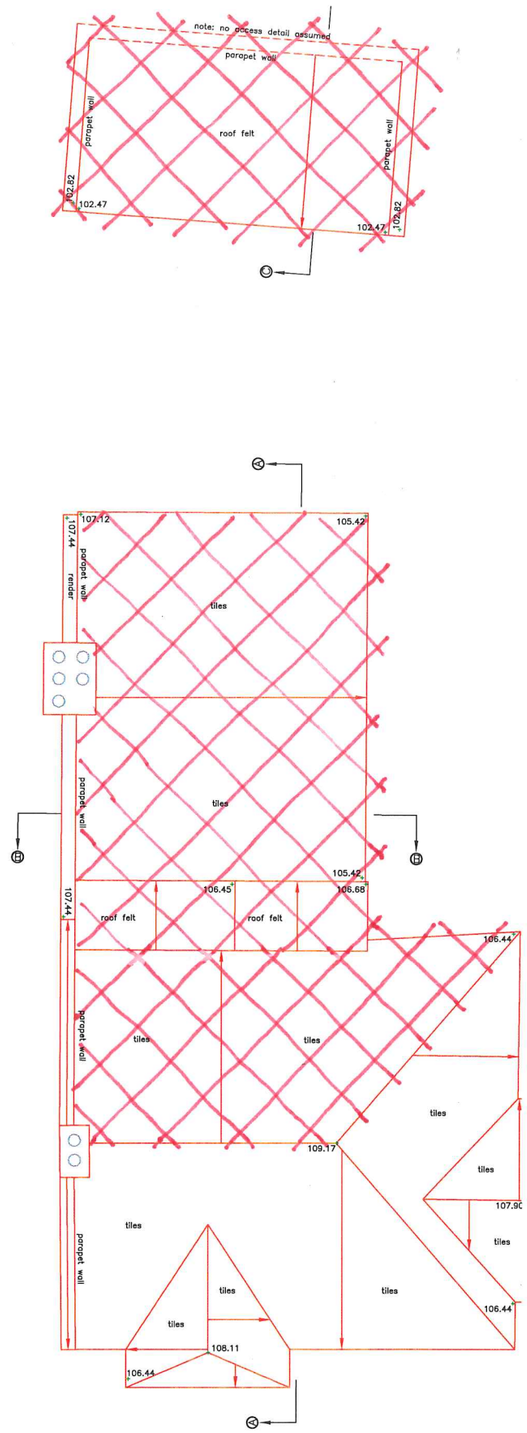

ROOF PLAN

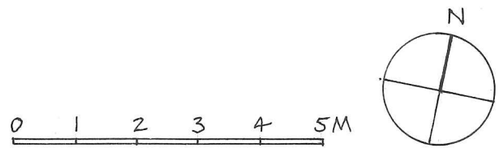

PROJECT 04 AGAMEMNON ROAD			
CONTENT DEMOLITION PLANS			
DATE 12.08.17	SCALE 1:100@A3	DRG NO L(--)02	REV
NICHOLAS JAMIESON ARCHITECT			