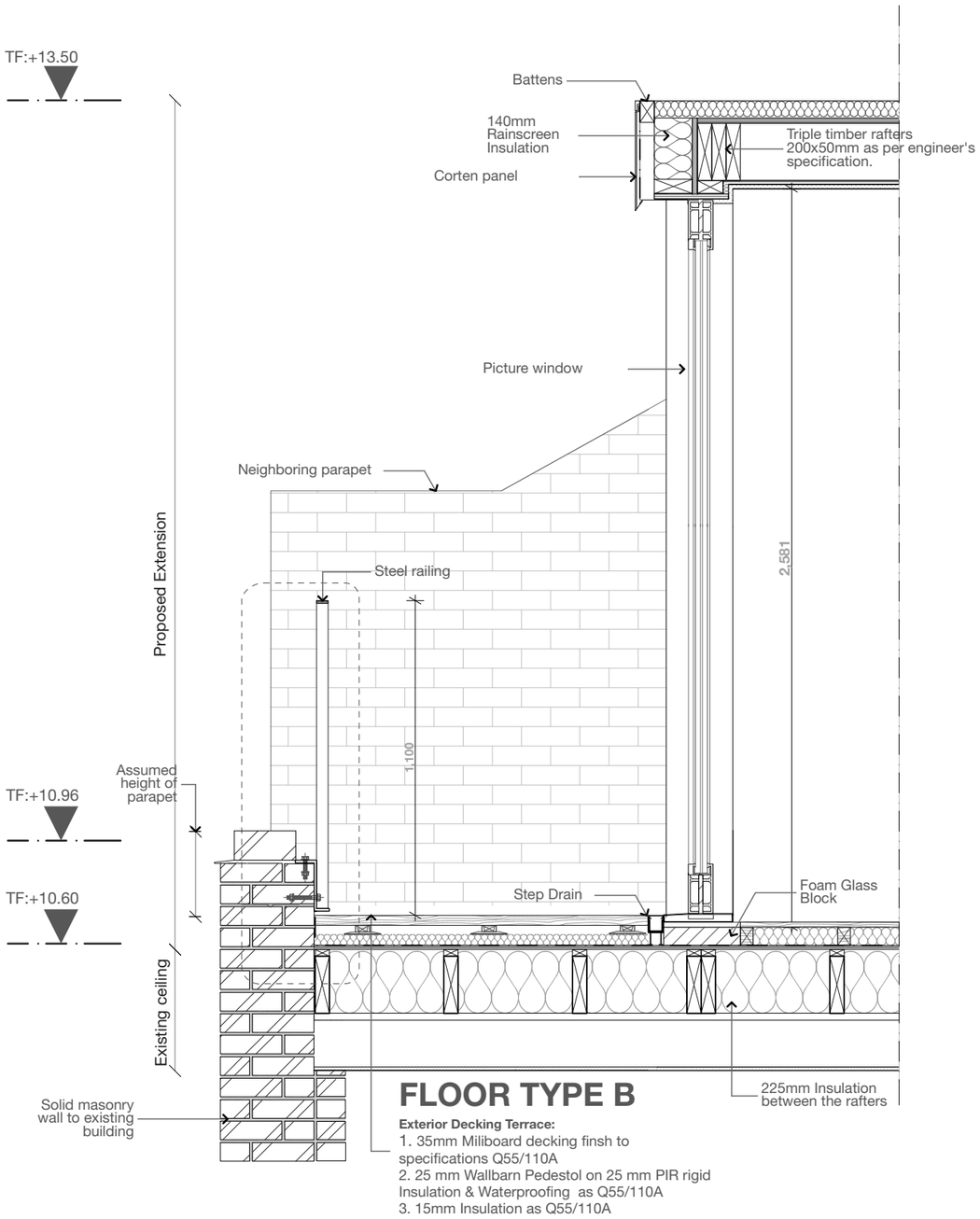

Detail Picture window and railing
Scale: 1:20

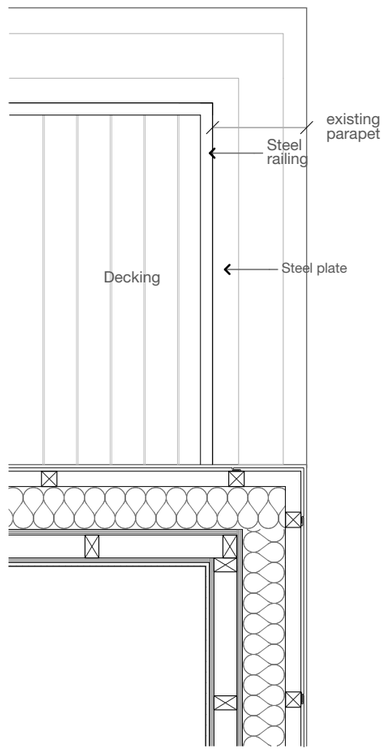

Railing Plan
Scale: 1:20

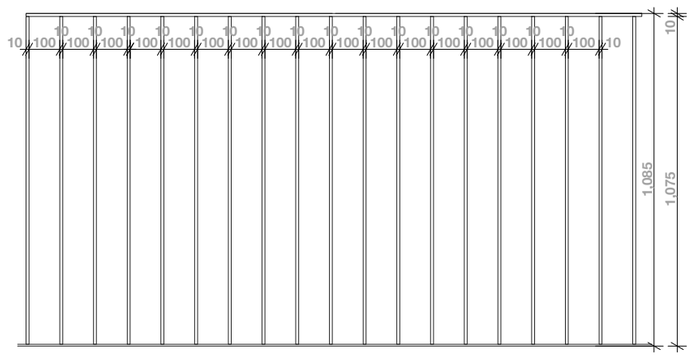

Railing Elevation
Scale: 1:20

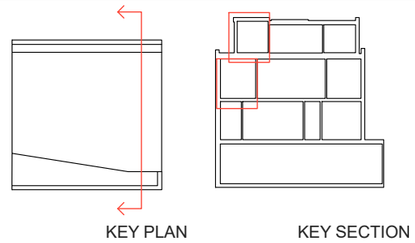

Notes
1. All dimensions to be checked on site.
2. All dimensions are to masonry unless otherwise stated (ie not plaster finishes)
3. All information is to be checked and verified by the contractors and sub-contractors for accuracy and fit.
4. Discrepancies or omissions to be brought to the attention of Douglas & King prior to construction.
5. Do not scale from this drawing.

0m 0.5m 1.5m 2.5m 5.0m 10.0m

Douglas and King Architects

148-150 Curtain Road London EC2A 3AR
t + 44 (020) 7613 1395
info@douglasandking.com
www.douglasandking.com

revision	date	notes
A	17/10/2017	First Issue
B	19/12/2017	Amemdments following planning comments
C	15/01/2018	Amemdments following planning comments
D	10/04/2018	Amemdments following planning comments

project: 4 Greenland Place NW1 0AP
client: Martin Davis
drawing title: Railing Detail
scale: 1:20 @A3
date: March 2018
drawing no: GREp4_ PL_DR_**D** 001
PLANNING

© Douglas and King ltd.