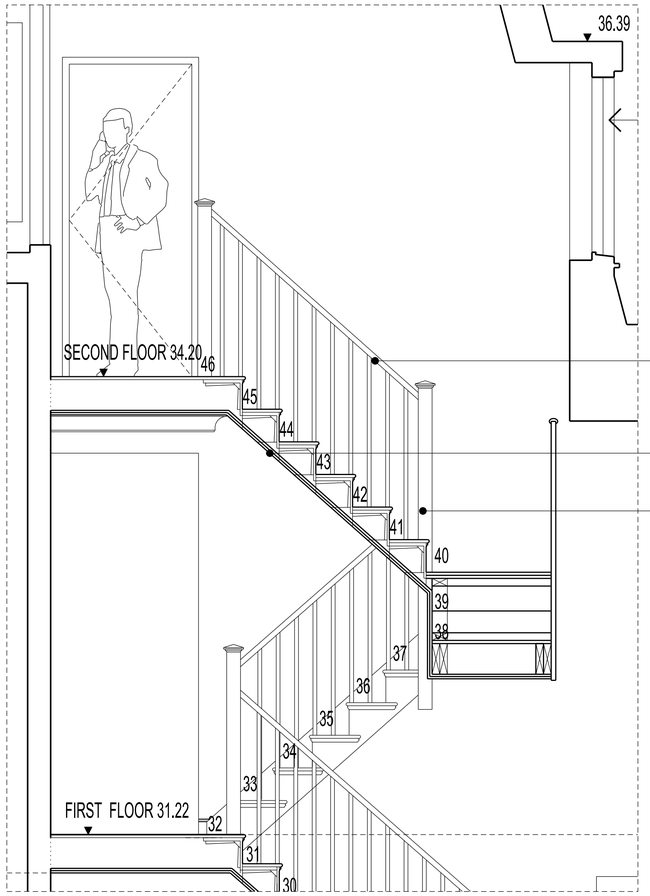

Mews Staircase Section 1-1
Scale 1:20@A1

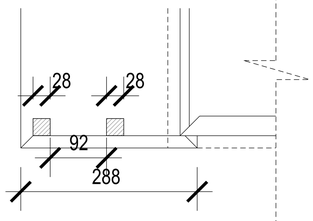

Tread/Riser Detail Plan
Scale 1:5@A1

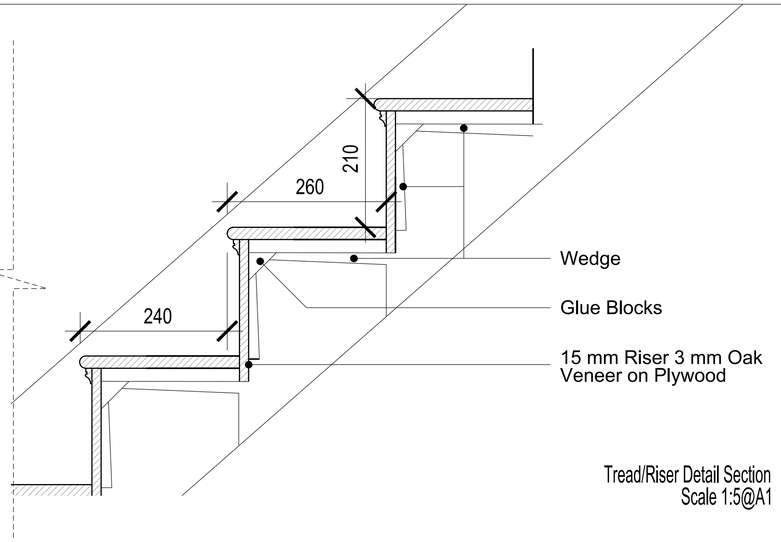

Tread/Riser Detail Section
Scale 1:5@A1

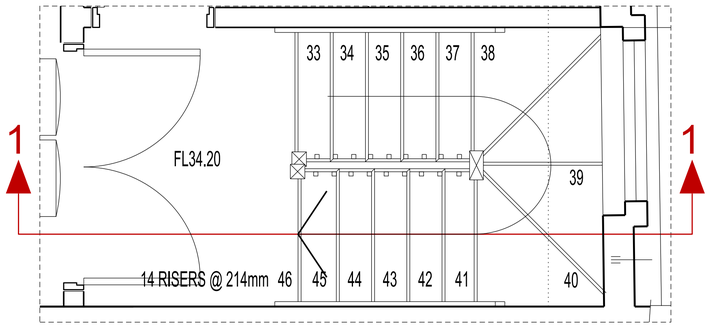

EXTRACT OF CONSENTED PLANS

Second Floor Plan
Scale 1:20@A1

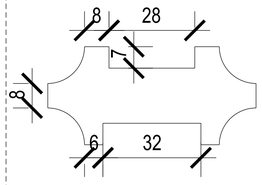

Section through baserail
Solid Oak
Scale 1:1@A1

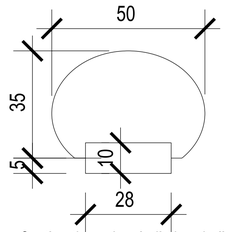

Section through spindle handrail
Solid Oak
Scale 1:1@A1

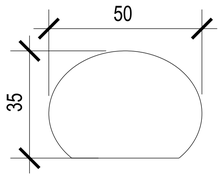

Section through wall mounted
handrail
Solid Oak
Scale 1:1@A1

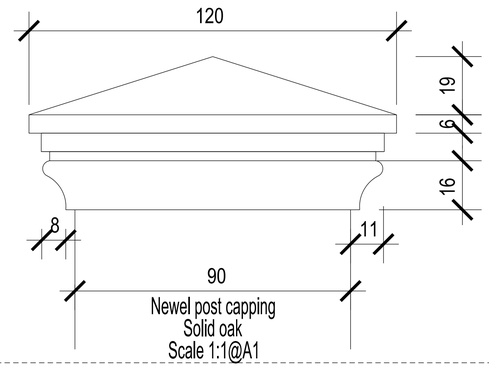

Newel post capping
Solid oak
Scale 1:1@A1

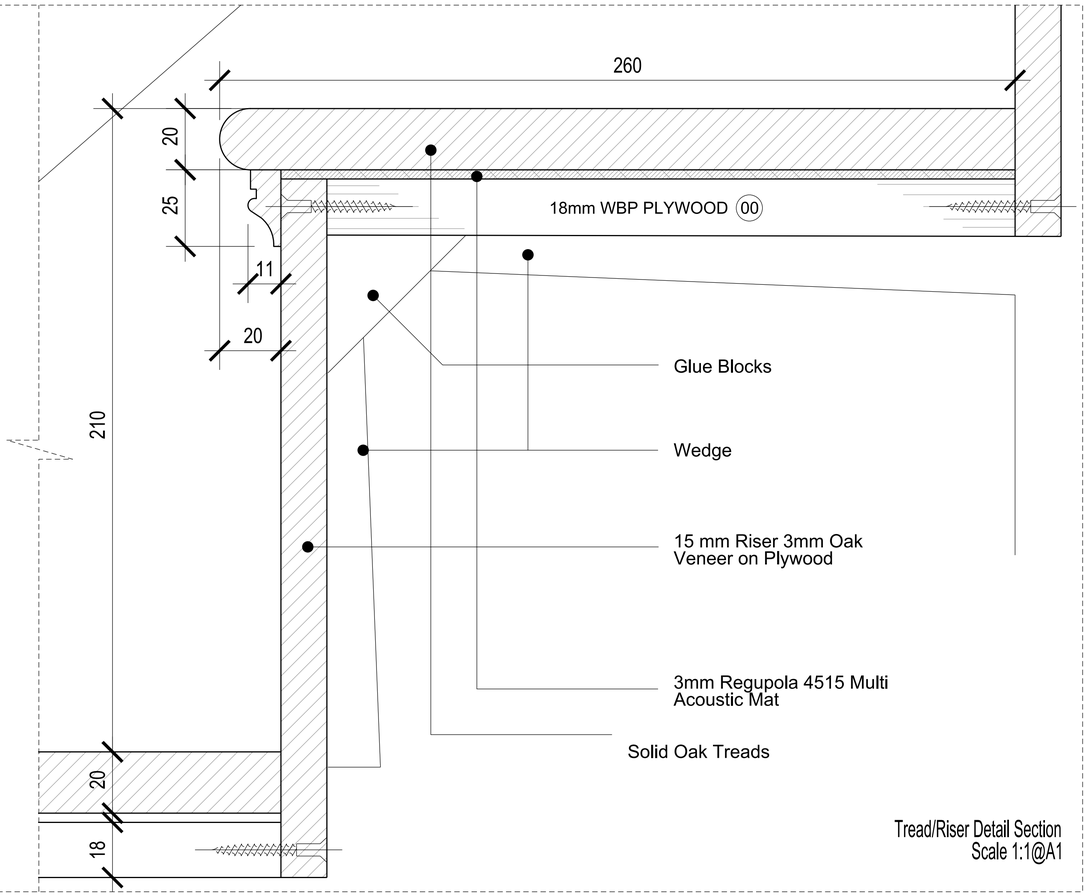

Tread/Riser Detail Section
Scale 1:1@A1

BUILDING DESIGN PARTNERSHIP LTD SHALL HAVE NO RESPONSIBILITY FOR ANY USE MADE OF THIS DOCUMENT OTHER THAN FOR THAT WHICH IT WAS PREPARED AND ISSUED

ALL DIMENSIONS SHOULD BE CHECKED ON SITE.

ANY DRAWING ERRORS OR DIVERGENCES SHOULD BE BROUGHT TO THE ATTENTION OF BUILDING DESIGN PARTNERSHIP LTD AT THE ADDRESS SHOWN.

REVISION / DESCRIPTION	DRAWN	CHECKED	DATE
A- DISCHARGE OF MEWS LBC CONDITION 4	GP	AC	13.03.2018
- DISCHARGE OF MEWS LBC CONDITION 4	GP	AC	09.03.2018

KEY PLAN

CLIENT LOGO

BDP.
16 Brewhouse Yard
Clerkenwell
London, EC1V 4LJ
United Kingdom

T +44 (0)20 7812 8000
F +44 (0)20 7812 8399
www.bdp.com

PROJECT TITLE: 42 BEDFORD SQUARE
PROJECT NUMBER: P2005698
DRAWING TITLE: MEWS HOUSE
TIMBER STAIR - FIRST TO SECOND
SCALE @ A1: -
DATE: 03.2018
DRAWING No.: (24)AS005
REVISION: A