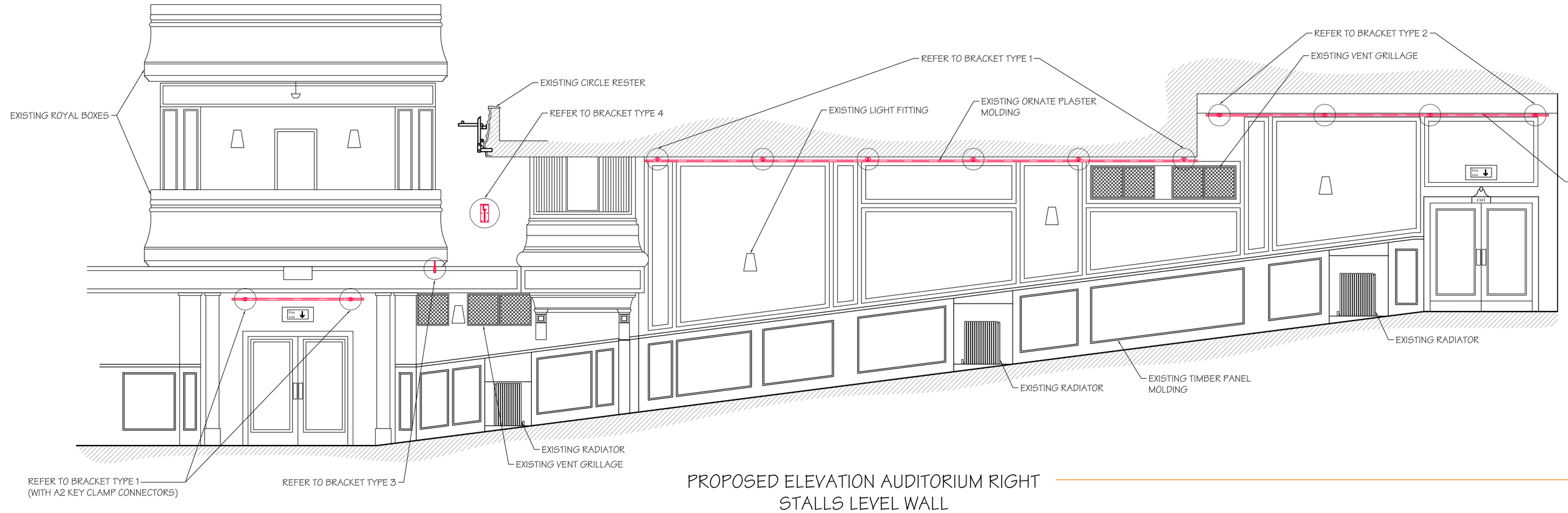

PROPOSED ELEVATION AUDITORIUM RIGHT STALLS LEVEL WALL
(SCALE 1:50 AT A1)

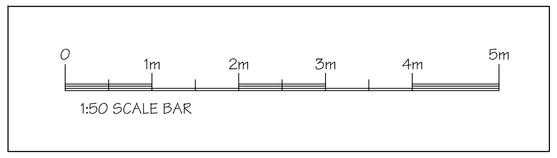

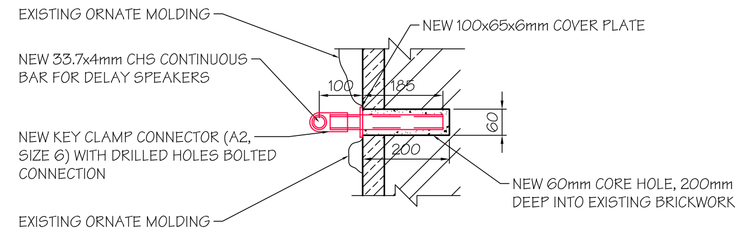

BRACKET TYPE 2
PROPOSED TYPICAL SECTION
THROUGH BRACKET
(SCALE 1:10 AT A1)

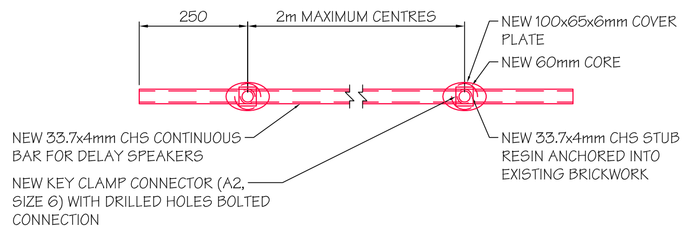

PROPOSED TYPICAL ELEVATION
ON BRACKET TYPE 2
(SCALE 1:10 AT A1)

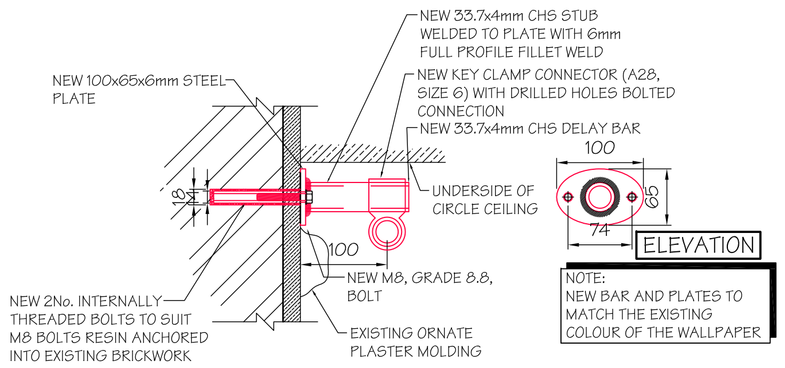

BRACKET TYPE 1
PROPOSED TYPICAL SECTION
THROUGH AUDITORIUM BRACKETS
(SCALE 1:5 AT A1)

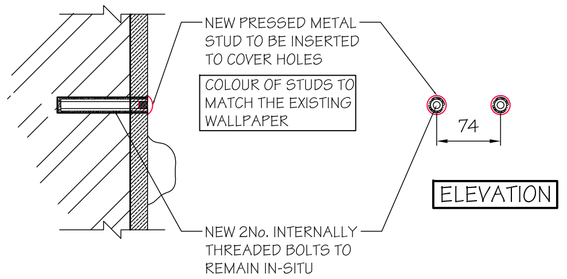

PROPOSED TYPICAL SECTION
THROUGH WALL WHEN BRACKETS
HAVE BEEN REMOVED
(SCALE 1:5 AT A1)

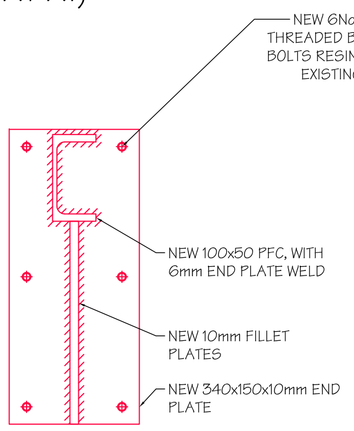

ELEVATION ON BRACKET TYPE 4
(SCALE 1:5 AT A1)

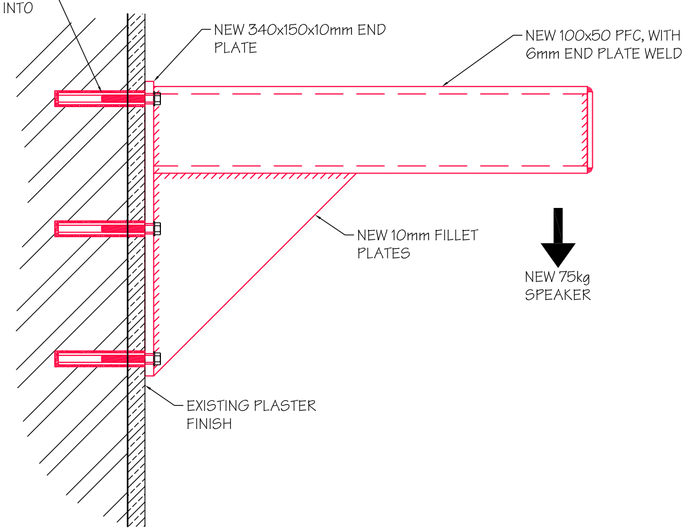

BRACKET TYPE 4
PROPOSED TYPICAL SECTION
(SCALE 1:5 AT A1)

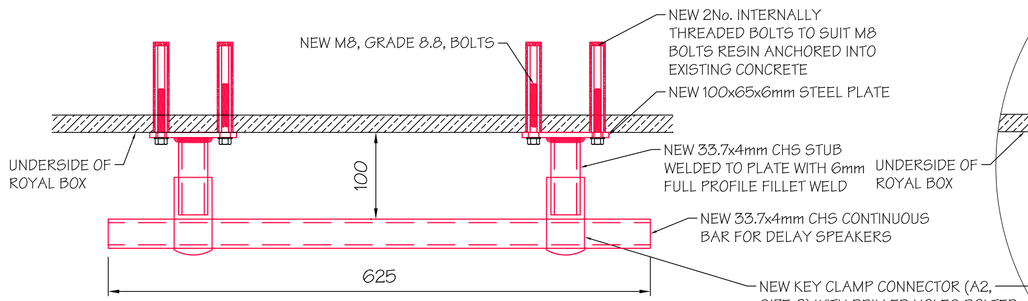

ELEVATION ON BRACKET TYPE 3
(SCALE 1:5 AT A1)

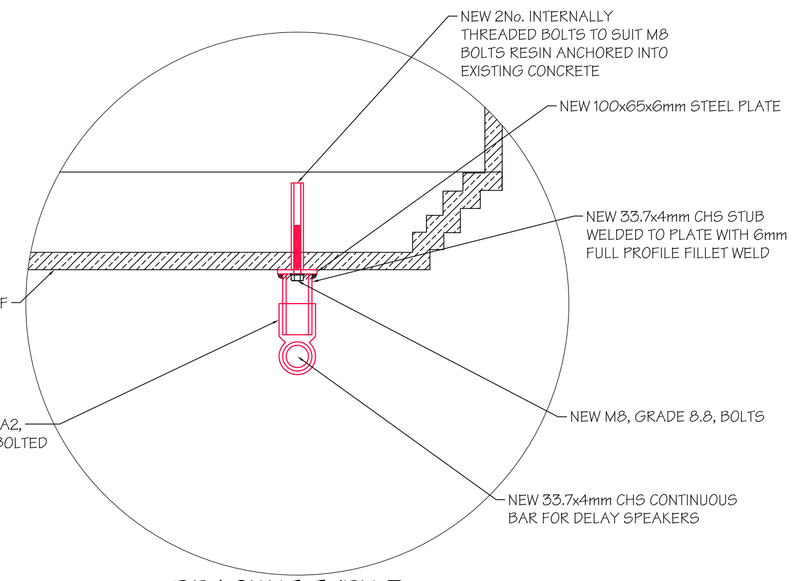

BRACKET TYPE 3
PROPOSED TYPICAL SECTION THROUGH UNDERSIDE
OF ROYAL BOX BRACKET
(SCALE 1:5 AT A1)

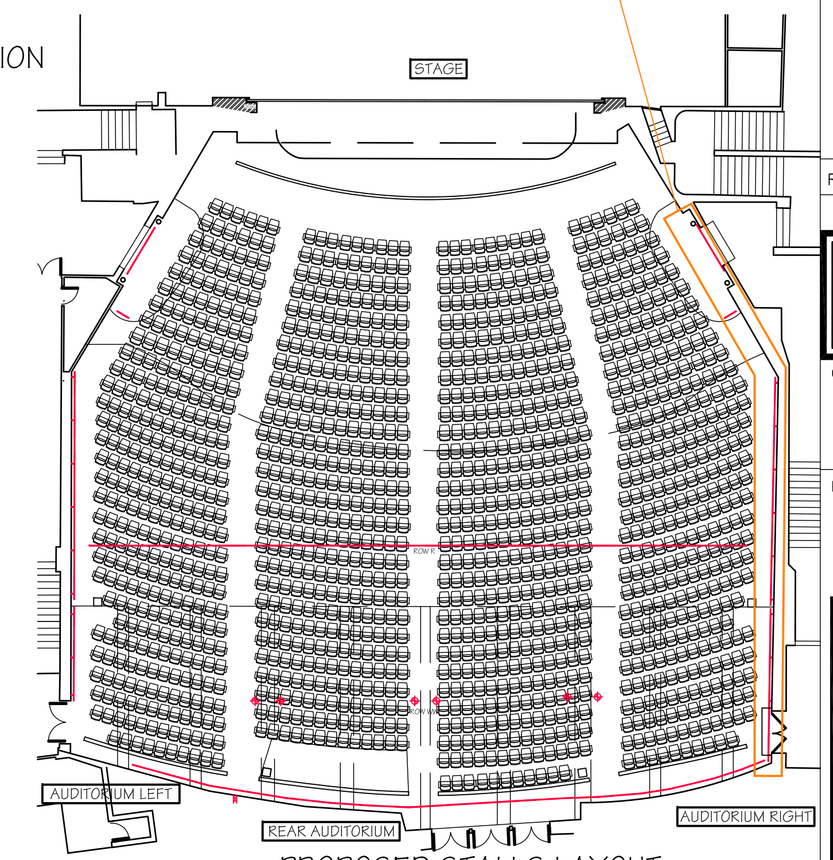

PROPOSED STALLS LAYOUT
(APPROX. SCALE 1:200 AT A1)

DO NOT SCALE THIS DRAWING.

Notes

REFER TO DRAWING 2851-01-010 FOR ALL NOTES

PRELIMINARY

Rev.	Date	Description	By
A	26-02-18	PDF AMENDED	DS

Revisions

Michael Jackson Consulting
Chartered Structural Engineers
204 BOLTON ROAD
WORSLEY
MANCHESTER, M28 3BN
Tel: 0161 790 4404
Fax: 0161 790 4405

Client
NEDERLANDER

Project
DOMINION THEATRE, LONDON

Drawing Title
PROPOSED AUDITORIUM RIGHT STALLS WALL

Scale	Date	Drawn	Checked	Passed
AS SHOWN	FEB 18	DS		

DRG. No.
2851-01-007 A

THIS DRAWING AND THE COMPUTER FILE OF THIS DRAWING ARE COPYRIGHT. THE COPYRIGHT BELONGS TO MICHAEL JACKSON CONSULTING ENGINEERS LIMITED (MJCE LIMITED). THIS DRAWING MAY THEREFORE, NOT BE REPRODUCED IN ANY FORMAT WITHOUT THE WRITTEN CONSENT OF MJCE LIMITED AND THE COMPUTER FILE MAY NOT BE TRANSFERRED WITHOUT THE WRITTEN CONSENT OF MJCE LIMITED.