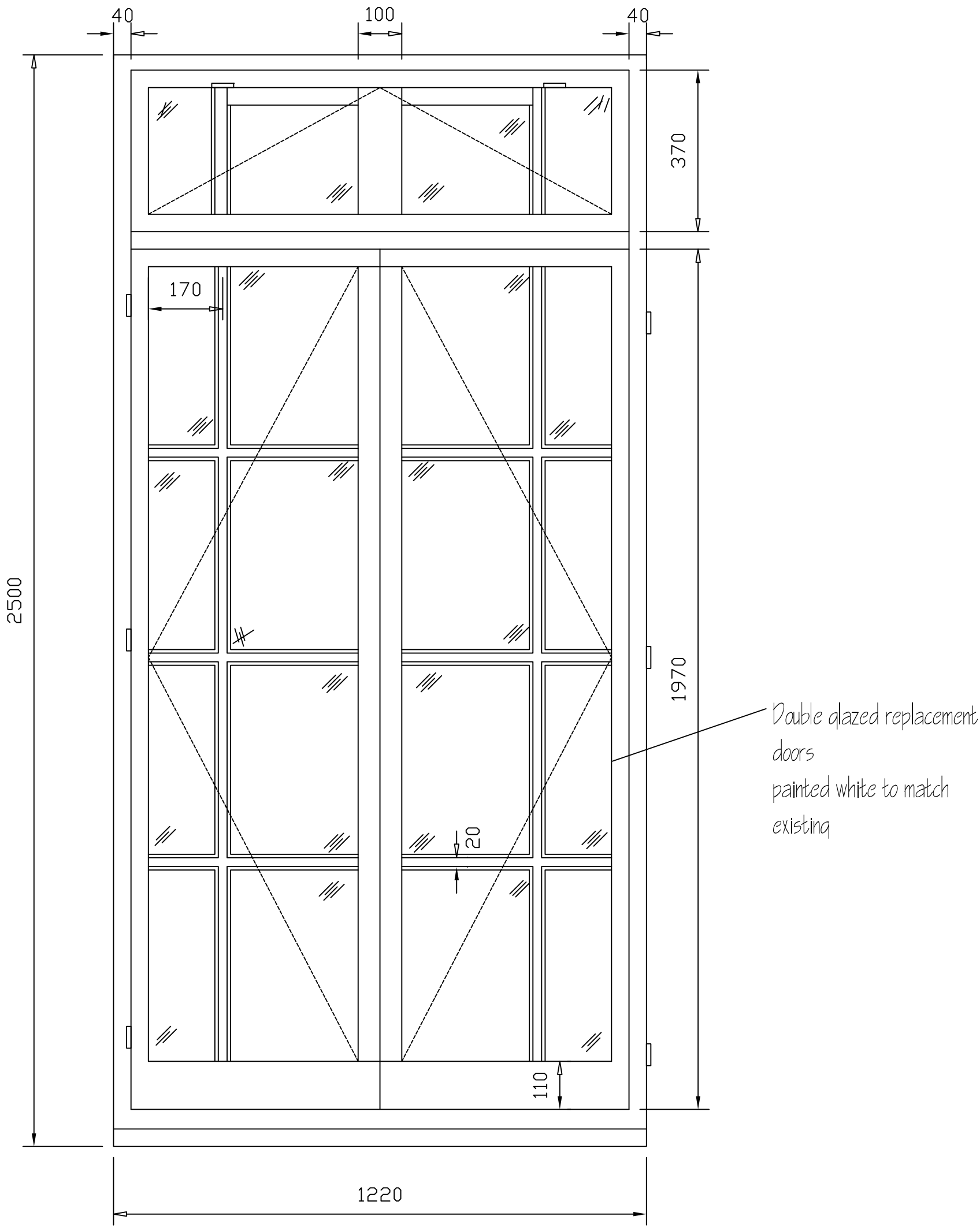

ELEVATION

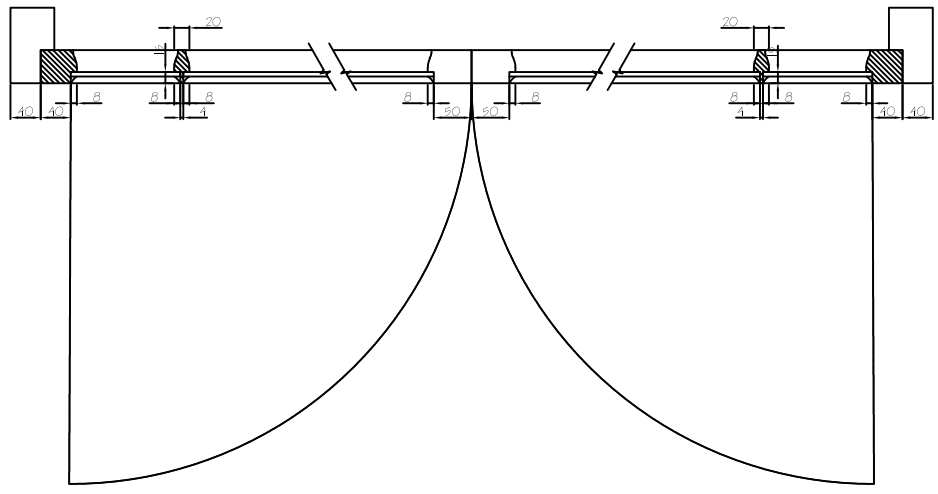

PLAN

SUBJECT TO MANUFACTURER'S DETAILS

IMPROVE.IT DESIGN LTD
97 PIXMORE WAY, LETCHWORTH GARDEN CITY,
HERTS, SG6 3TP. Tel: 07850 243045
Email: improve.it@ntlworld.com

REV A: PLAN ADDED

CLIENT: MR PHILLIP SAUKA
FLAT A, 98 FORTRESS ROAD
LONDON, NW5 2HJ

PROPOSED REPLACEMENT WINDOWS
(PROPOSED DOORS)

SCALE:	1:10 (A3)	DRG No.	20107/03 A