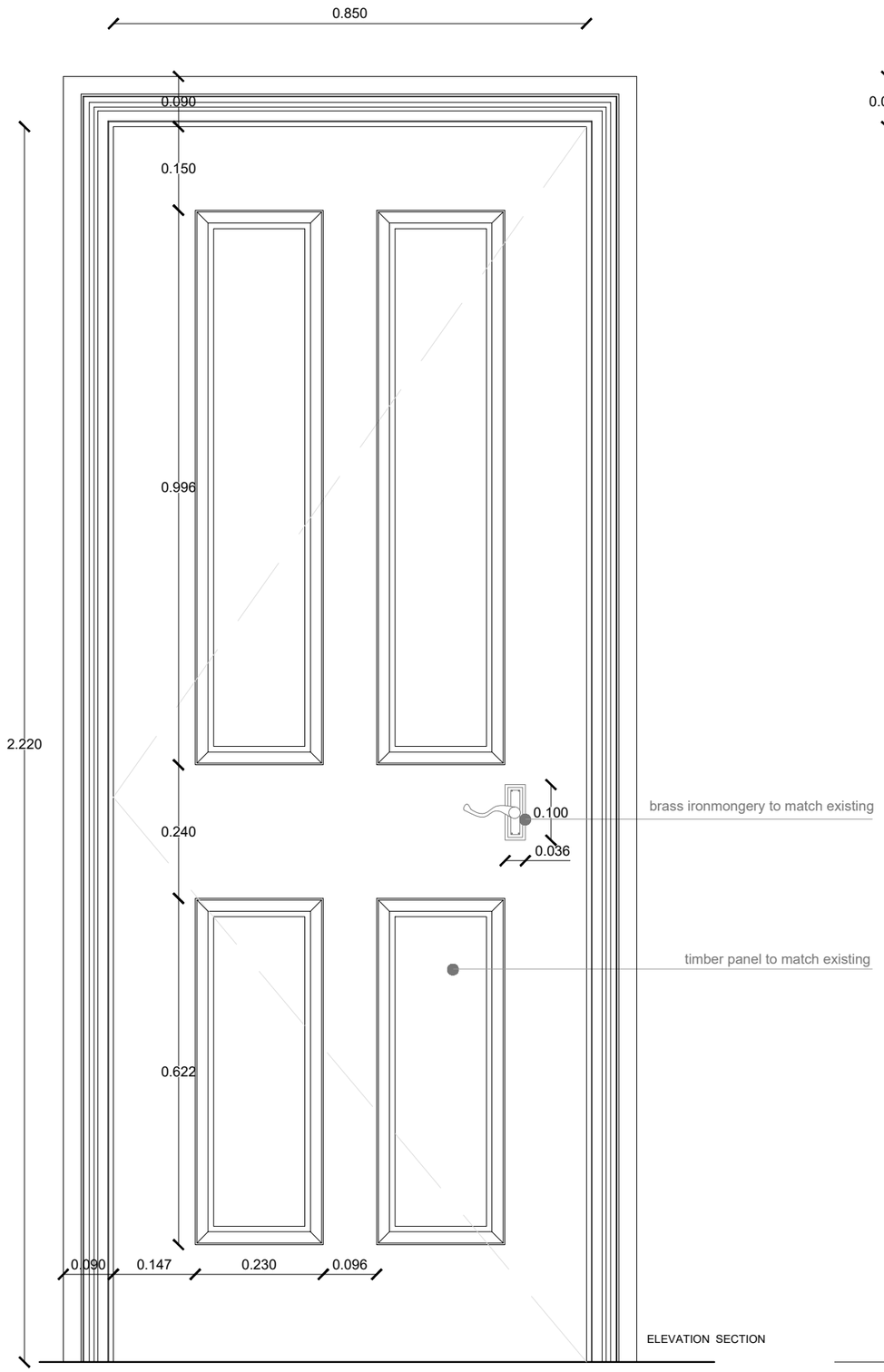

ELEVATION SECTION

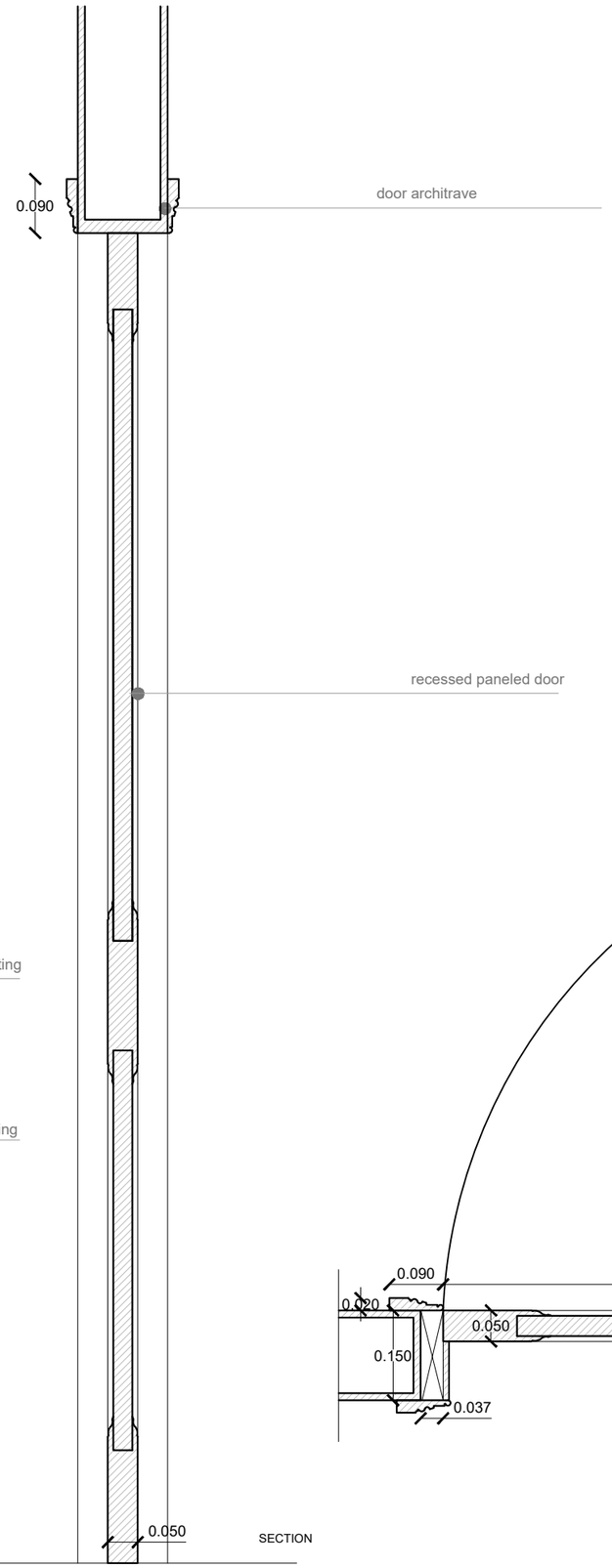

SECTION

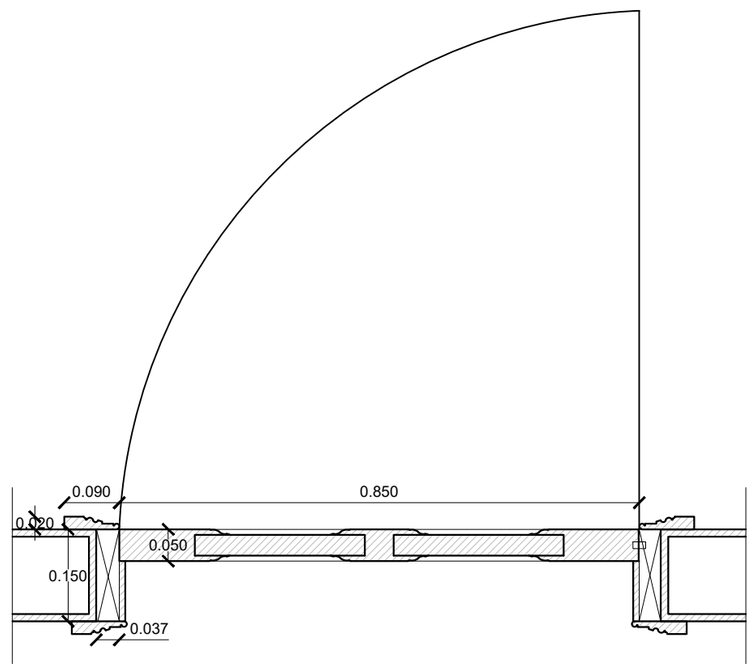

PLAN

NOTES:

1. DO NOT SCALE FROM THIS DRAWING
2. ALL DIMENSIONS ARE IN METERS UNLESS OTHERWISE SPECIFIED
3. TO BE CONSTRUCTED IN ACCORDANCE WITH BRITISH STANDARDS
4. ALL MEASUREMENTS ARE SUBJECT TO CONFIRMATION BY THE CONTRACTOR DURING THE WORKS ON SITE.
5 THIS DRAWING IS TO BE READ IN CONJUNCTION WITH ALL RELEVANT ARCHITECTURAL AND ENGINEER DRAWINGS AND SPECIFICATIONS

REV.	DATE	COMMENTS

PROJECT:
FLAT 4, 10 LYNDHURST GARDENS

CLIENT:

ARCHITECTURAL DRAWINGS

DRAWING NO. AT505 REVISION NO. R0

DRAWING
PROPOSED
INTERIOR DOOR
OPTION 2

APPROVED BY

DRAWN BY

SCALE 1/10@A3

DATE: 15/12/2017

KOKORELIAARCHITECTS
14 ABERDARE GARDEN NW6 3PY TEL. UK (0044) 2076257005 GR 00302106549300 WWW.PLUSTWO.GR