Drawing Number:F301-63-CPH-00-151 AB

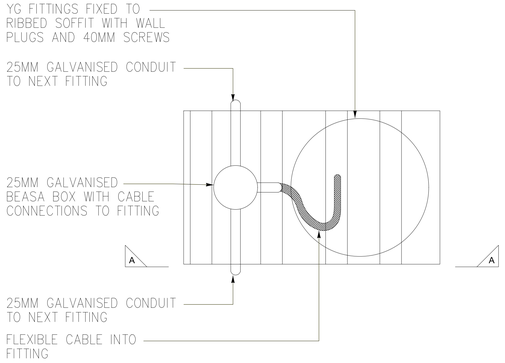

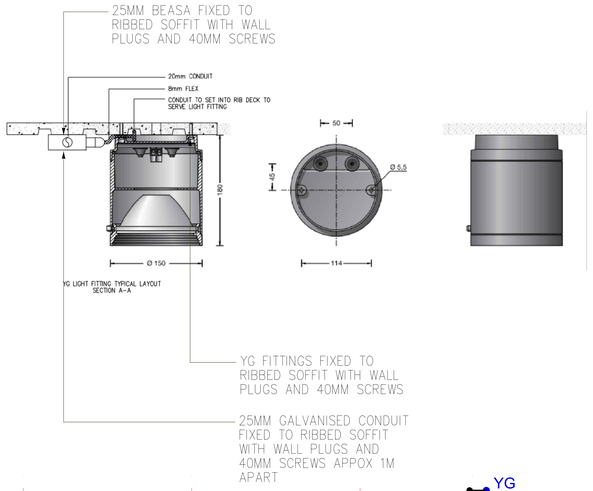

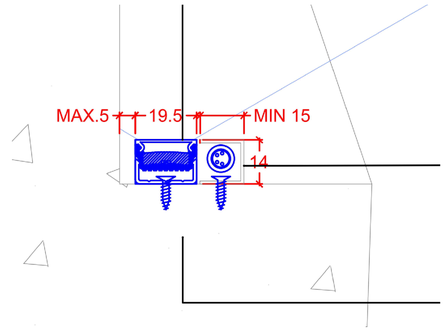

XB LIGHT FITTING AT TOP OF COLUMN

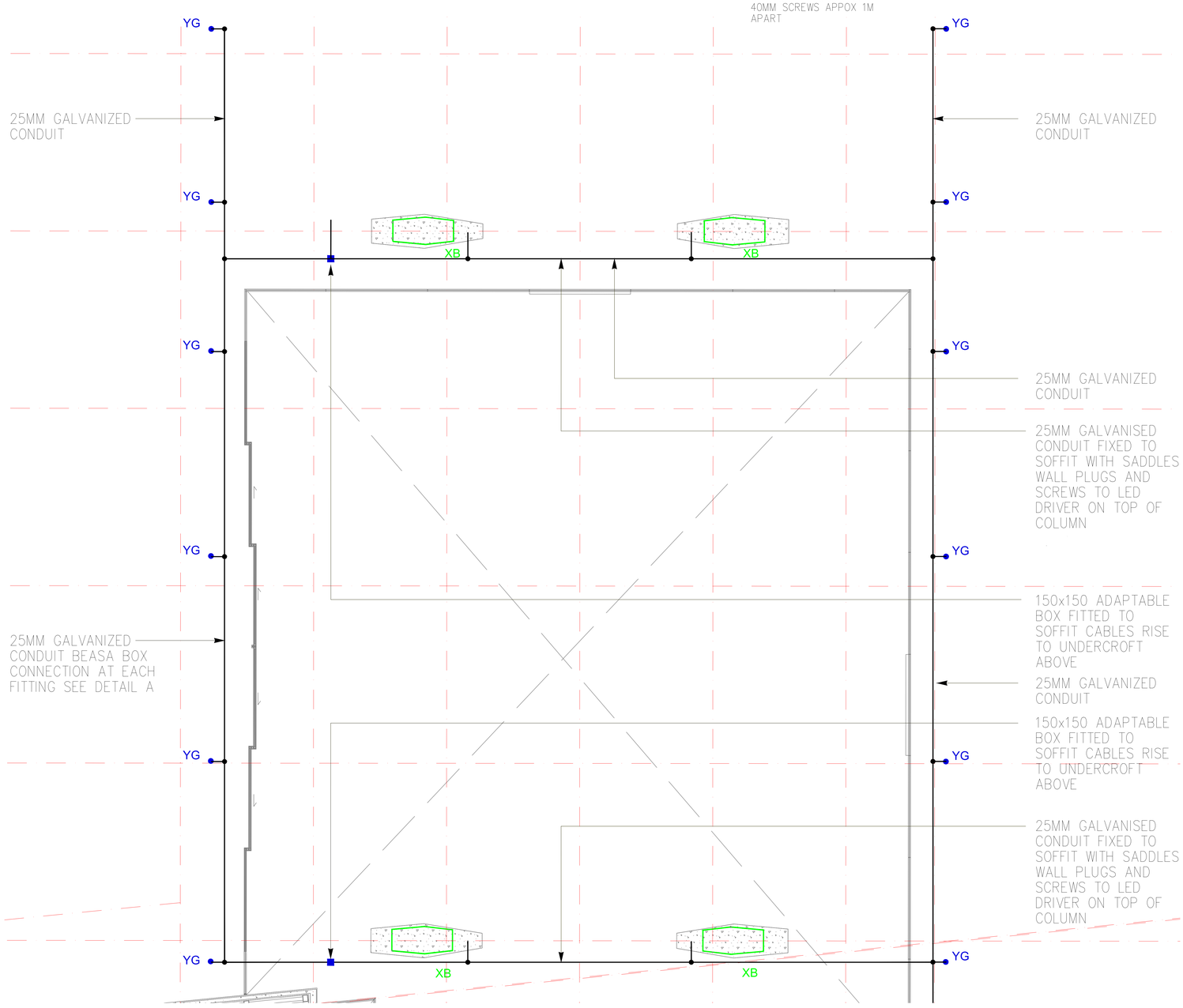

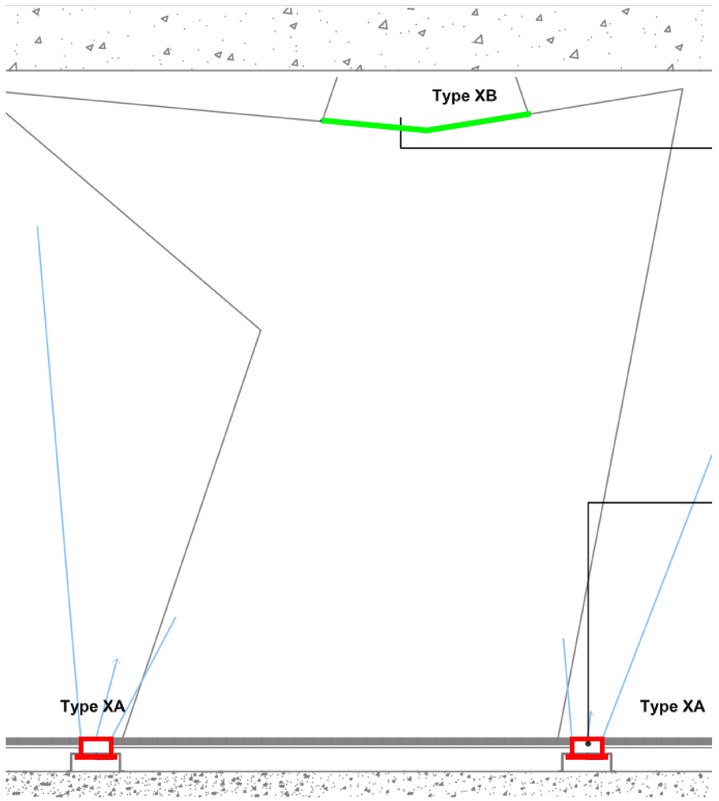

SECTION ON COLUMN

AS BUILT

Notes

1. DO NOT SCALE.
2. THIS DRAWING TO BE READ IN CONJUNCTION WITH LATEST ARCHITECTURAL AND STRUCTURAL DRAWINGS.
3. ALL DIMENSIONS IN MILLIMETRES UNLESS STATED OTHERWISE.
4. ALL DATUM LEVELS IN METRES UNLESS NOTED OTHERWISE.
5. FOR STANDARD SYMBOLS AND NOTATION REFER TO DRG No. F301-00-SW-500-2000.
6. FOR EQUIPMENT DETAILS REFER TO TECHNICAL SCHEDULES.
7. THIS DRAWING TO BE READ IN CONJUNCTION WITH RELEVANT DRAWINGS AND TECHNICAL SPECIFICATIONS.
8. REFER TO RELEVANT SERVICES SCHEMATIC FOR SIZES.
10. TO BE READ IN CONJUNCTION WITH SPECIALIST LIGHTING CONSULTANTS DRAWINGS & LUMINAIRE SCHEDULES.
11. REFER TO DISTRIBUTION BOARD SCHEDULES FOR CIRCUIT REFERENCES

MAINS, 230V CIRCUIT	DALI CONTROL CIRCUIT LUMINAIRES SUPPLIED
DB/B1/EX2/7L2	1.0.07 1.0.08
DB/B1/EX2/1/L3	1.0.04 1.0.09 1.0.10 1.0.06
DB/B1/EX2/1/L2	1.0.12
DB/B1/EX/6L3	1.0.16 (QUARTER)
DB/B1/EX/7L3	1.0.16 (QUARTER)
DB/B1/EX/8L3	1.0.16 (QUARTER)
DB/B1/EX/9L3	1.0.16 (QUARTER)
DB/B1/02/9/L2	1.0.18 1.0.19 1.0.15
DB/B1/02/16/L2	1.0.20
DB/B1/02/17/L2	50% 1.0.21
DB/B1/02/18/L2	50% 1.0.21

REFER TO SPECIALIST LIGHTING DESIGNERS INFORMATION FOR CONFIRMED LUMINAIRE REFERENCES, GROUPINGS AND QUANTITIES.

YG

XB

This Drawing Is Based Upon The Following Information:

Rev	Description	Drawn	Checked	Date
AB	AS BUILT	CH	ER	17/10/17

Lome Stewart

Stewart House,
Kenton Road, Harrow,
Middlesex, HA3 9TU.
Telephone: 020-8732 2000
Facsimillie: 020-8204 9453
www.lornestewart.co.uk

IBSECAD

14 Hosier Lane
London, EC1A 9LQ
Telephone: +44 (0) 20 7618 1150
Email: london@ibsecad.net

Project Name
CENTRE POINT

Drawing Status
AS BUILT

Drawn By	Drawn Date	Scale
CH	OCT 17	1:50@A0

Title
CENTRE POINT HOUSE
GROUND MEZZANINE FLOOR
LANDLORD LIGHTING LAYOUT RETAIL 1

Origin	CDFS Code	Building Code	Level	Series	Part / Sheet	Revision
F301	63	CPH	00	151		AB

IBSECAD ORIGINAL - NOT TO BE MODIFIED BY HAND