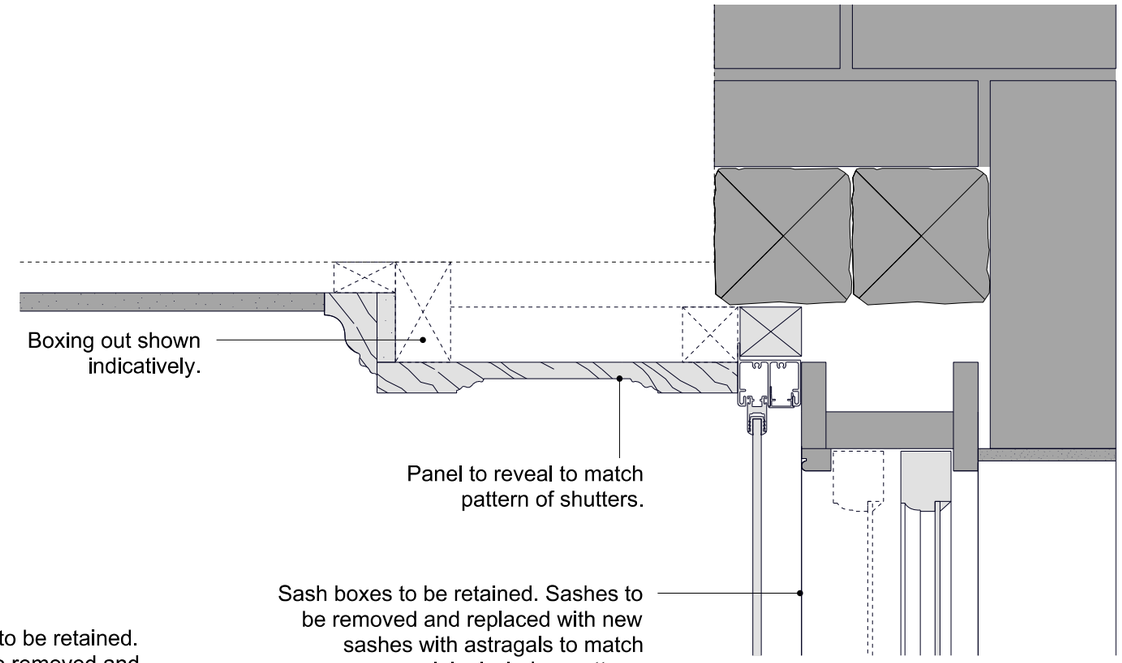

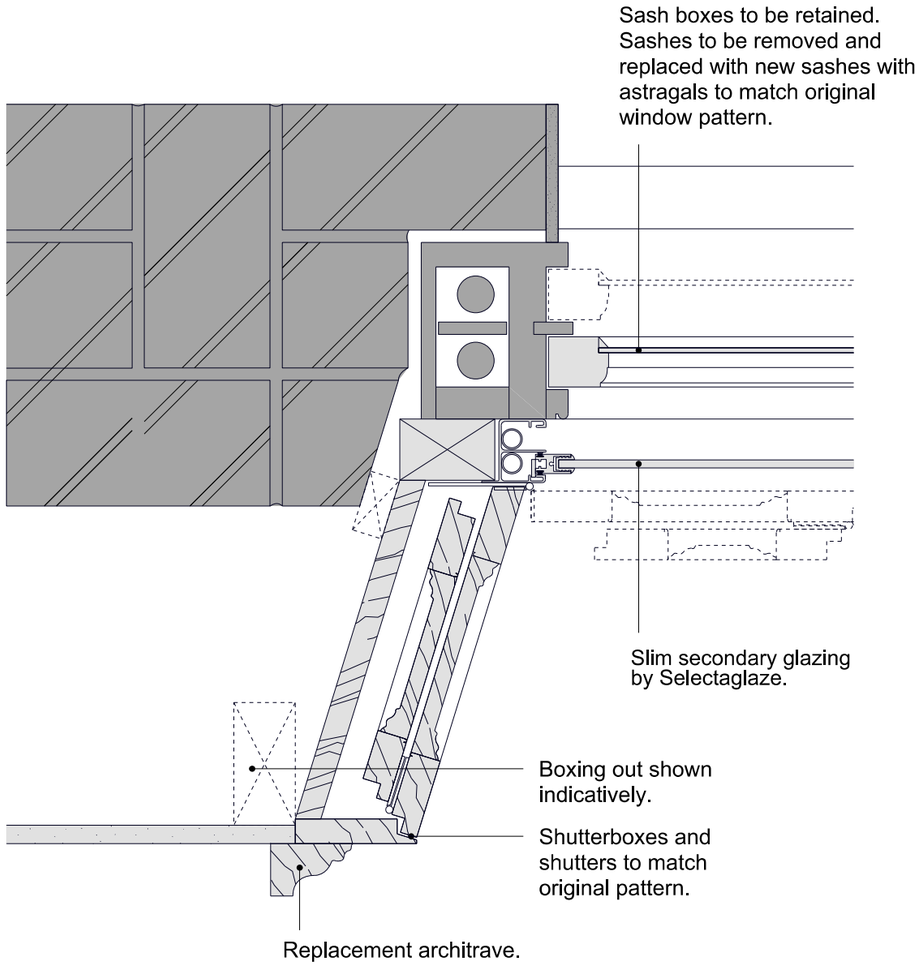

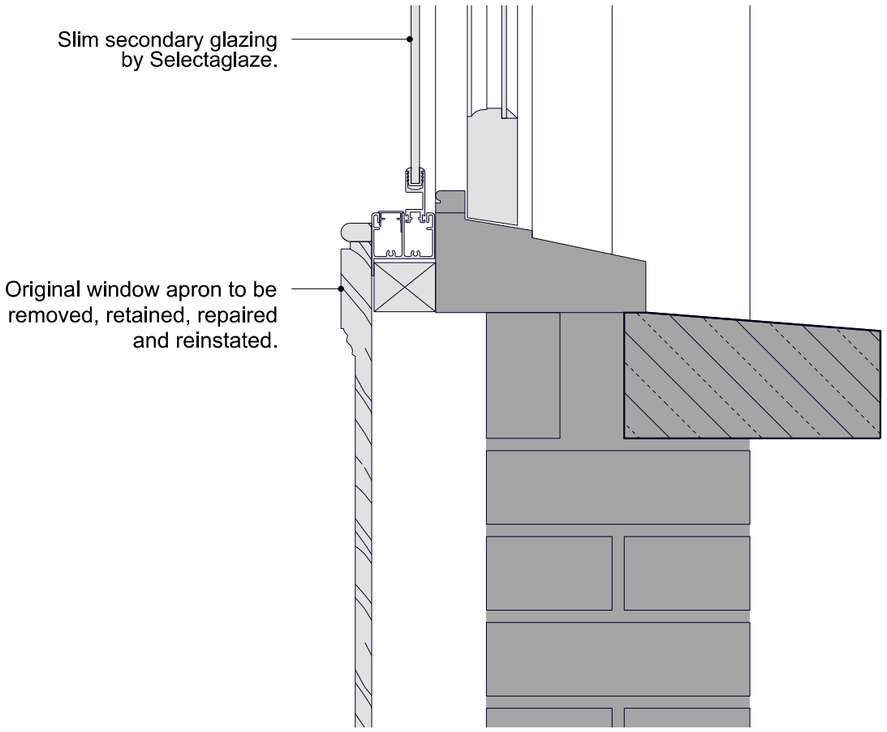

Any discrepancies should be reported immediately to the architect
If in doubt ask.
This drawing is copyright of the Architect.

Drawing Status:
Planning

Revision	Date

prewett bizley architects
118a London Wall London EC2Y 5JA 020 7256 2195
rp@ prewettbizley.com www.prewettbizley.com

Project
42 Doughty Street
London
WC1N 2LF

Drawing
Proposed Second Floor
Front Window Details

Scale
1:5 @ A3

Date
October
2017

Drg. no.
145 P 160

Revision