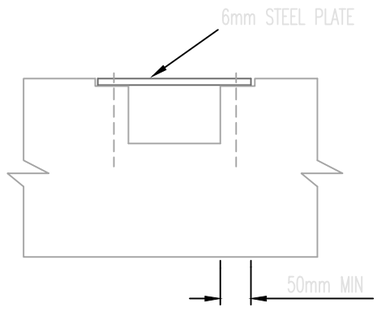

NOTCH REPAIR DETAIL 1

FOR NOTCHES UPTO 25mm DEEP AND OVER SERVICES

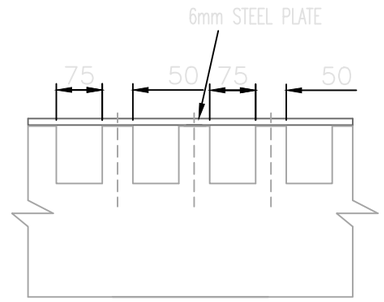

MULTI-NOTCH DETAIL 2

FOR NOTCHES UPTO 25mm DEEP AND OVER SERVICES

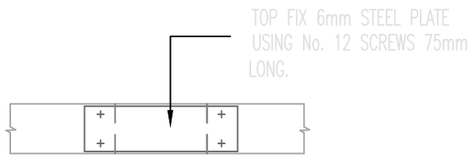

PLAN ON NOTCH REPAIR

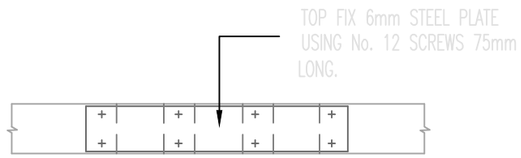

PLAN ON MULTI-NOTCH REPAIR

DO NOT SCALE

Use only written dimension. All dimension must be verified prior to works being put into hand and any discrepancies reported to the originator.

Health and Safety Information

	Details	Sign	Date
Asbestos Survey			
Structural Check/Lifting & Handling			
Site Survey			
Access and Egress/Site Compound			
Hazards Identified			

General Notes

REV	Details of Revision	Date	Sign

THE BEDFORD ESTATES

29a Montague Street, London WC1B 5BL

Tel: +44(0)20 7636 2885
Fax: +44(0)20 7255 1729

Project
6 Bayley Street

Title
Timber Notch Repairs

Drawing No
BB002 - 2017 - DT02

Scale	Drawn	Checked	Co-ord chk
As Shown	SEEM		
Drawing size	**Date**	**Date**	**Date**
A3	Sep '17		

Status
PLANNING

©BEDFORD ESTATES BLOOMSBURY LTD COPYRIGHT : REPRODUCTION IN WHOLE OR PART BY ANY MEANS IS PROHIBITED WITHOUT THE PRIOR WRITTEN PERMISSION OF BEDFORD ESTATES BLOOMSBURY LTD