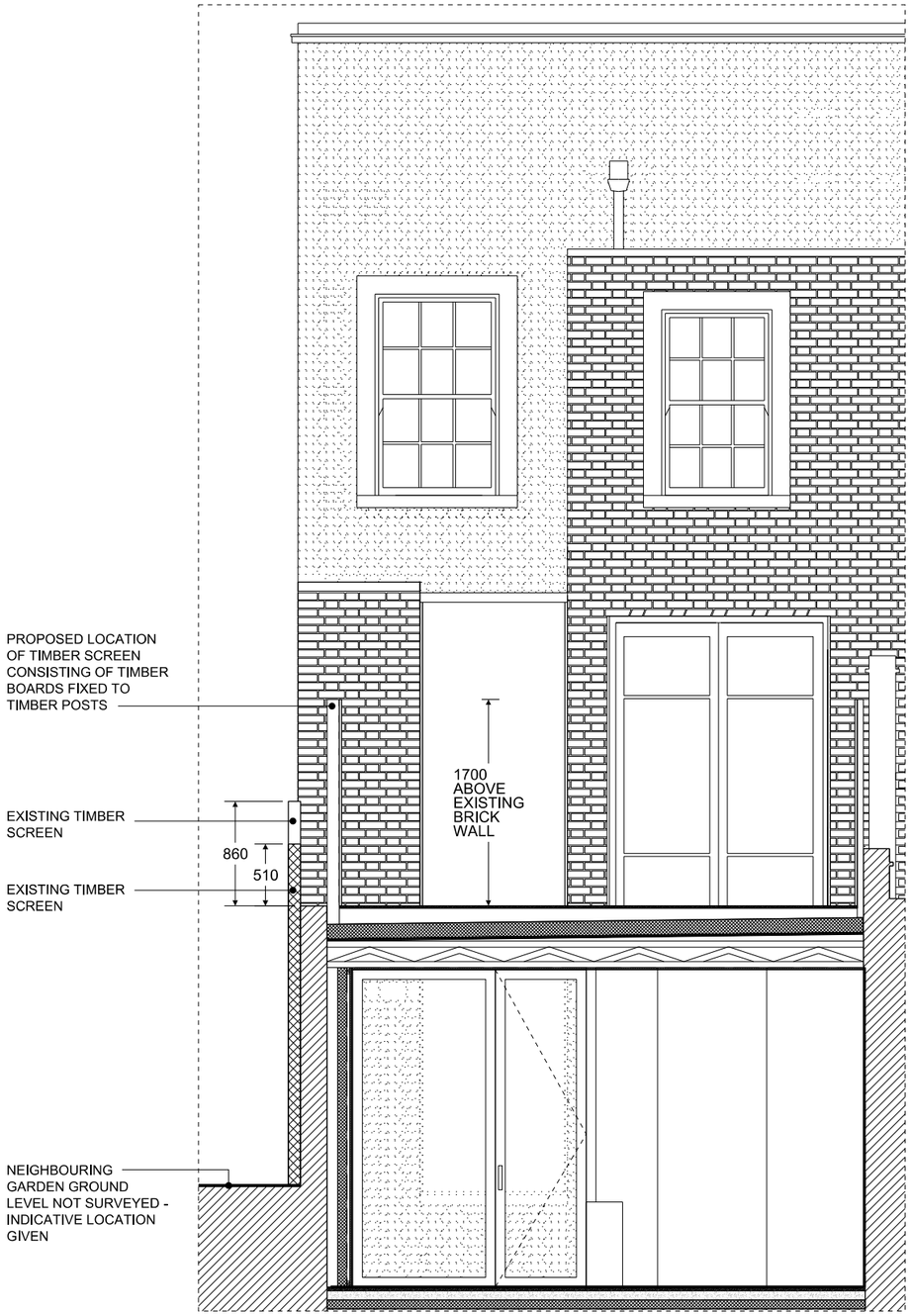

01 / 02-700 PROPOSED COURTYARD SECTION AND REAR ELEVATION
1:50 @ A3

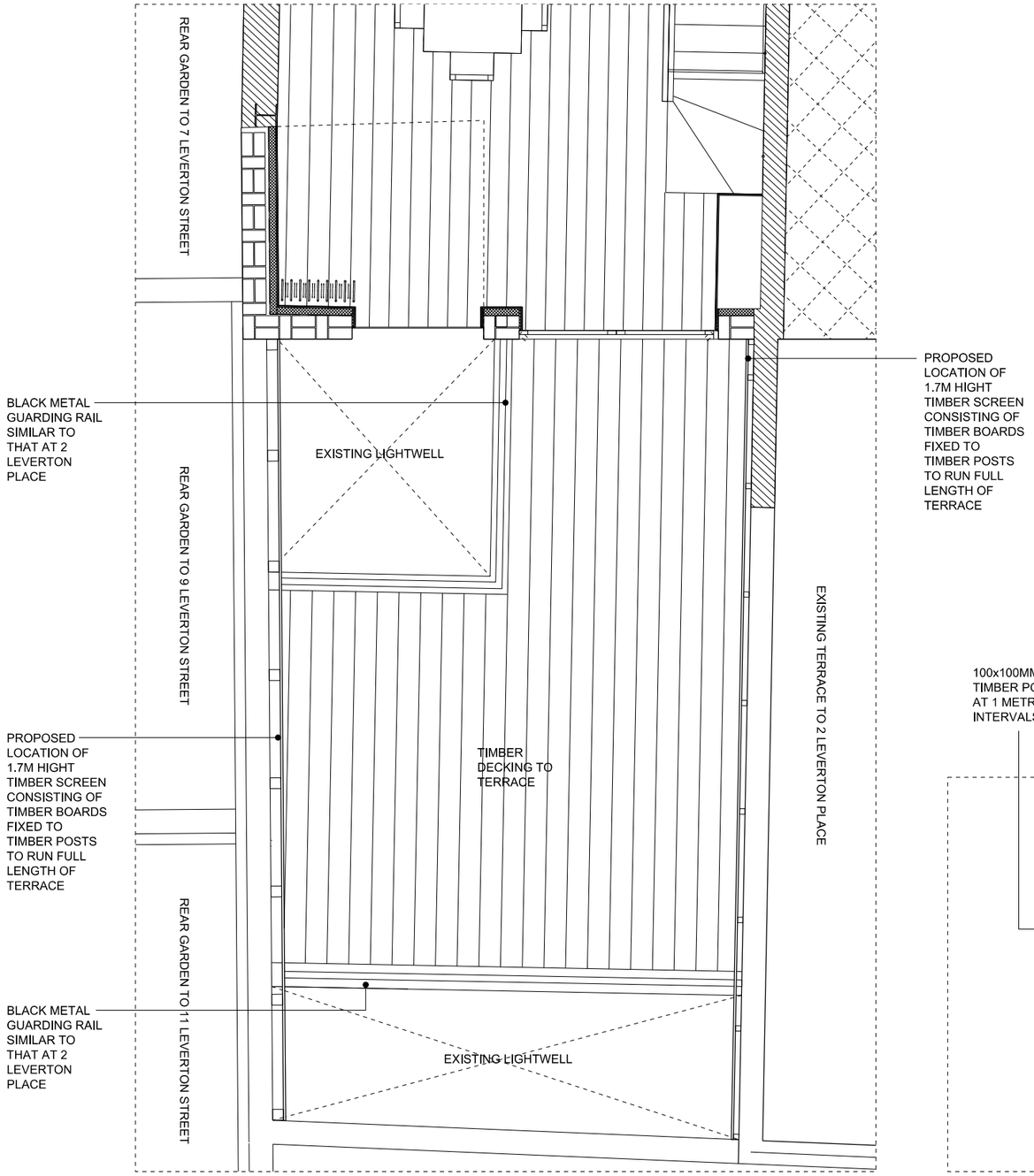

02 / 02-700 PROPOSED FIRST FLOOR SCREEN LOCATION PLAN
1:50 @ A3

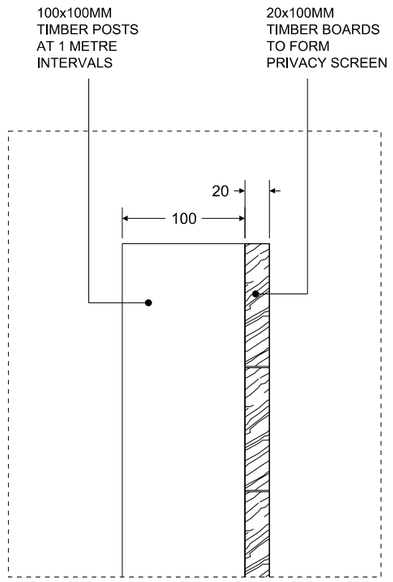

03 / 02-700 PROPOSED SCREEN DETAIL SECTION
1:5 @ A3

DATE:	REVISION:
C4	08.06.2017

This drawing to be read in conjunction with all other contract documents and specifications and all other consultant drawings. Drawing not to be scaled and all levels and dimensions to be checked on site by contractor with any discrepancies notified to Architect prior to proceeding with works. No drawings should be reproduced in any form without prior written permission of Nathaniel Mosley Architects Ltd. Copyright and intellectual property of all information shown is reserved by them.

JOB NO.:	PROJECT:	DRAWING:	SCALE:	DATE:
015	3 Leverton Place	Proposed Rear Elevation, First Floor Plan and Screen Detail Section	1:50 @ A3 1:50 @ A3	08.06.17
PHASE:	PLANNING	DRAWING NO.: 15 02 700	REV.: C4	DRN / CHD: NM / EM

NATHANIEL MOSLEY ARCHITECTS LTD
31 Beresford Road, London, N5 2HS
+44 (0)20 7226 5422
info@nathanielmosley.com