Pos. NE - SS W3, Quantity: 1
Finish: HP
Job: DWL - 23 Prince Albert Road - REV
Exterior View

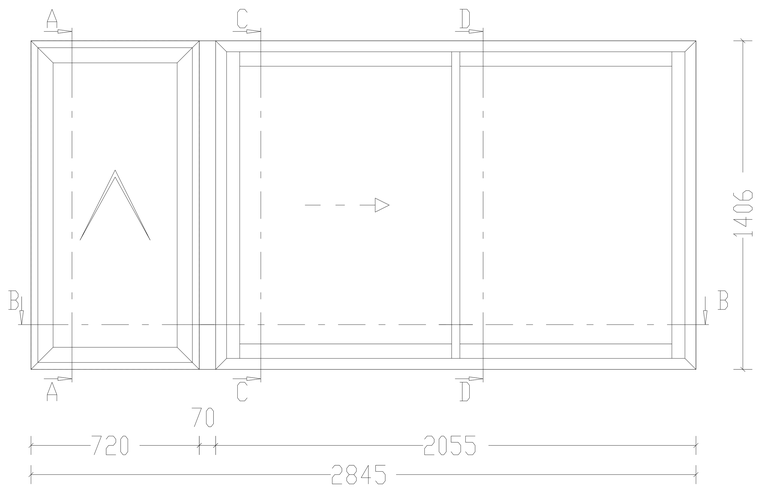

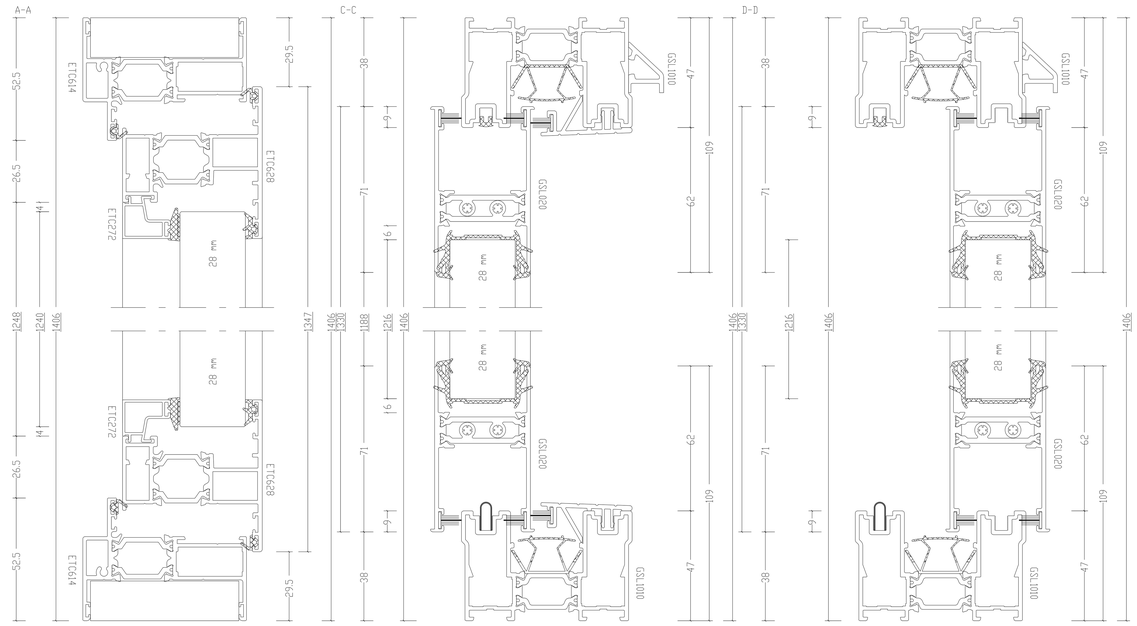

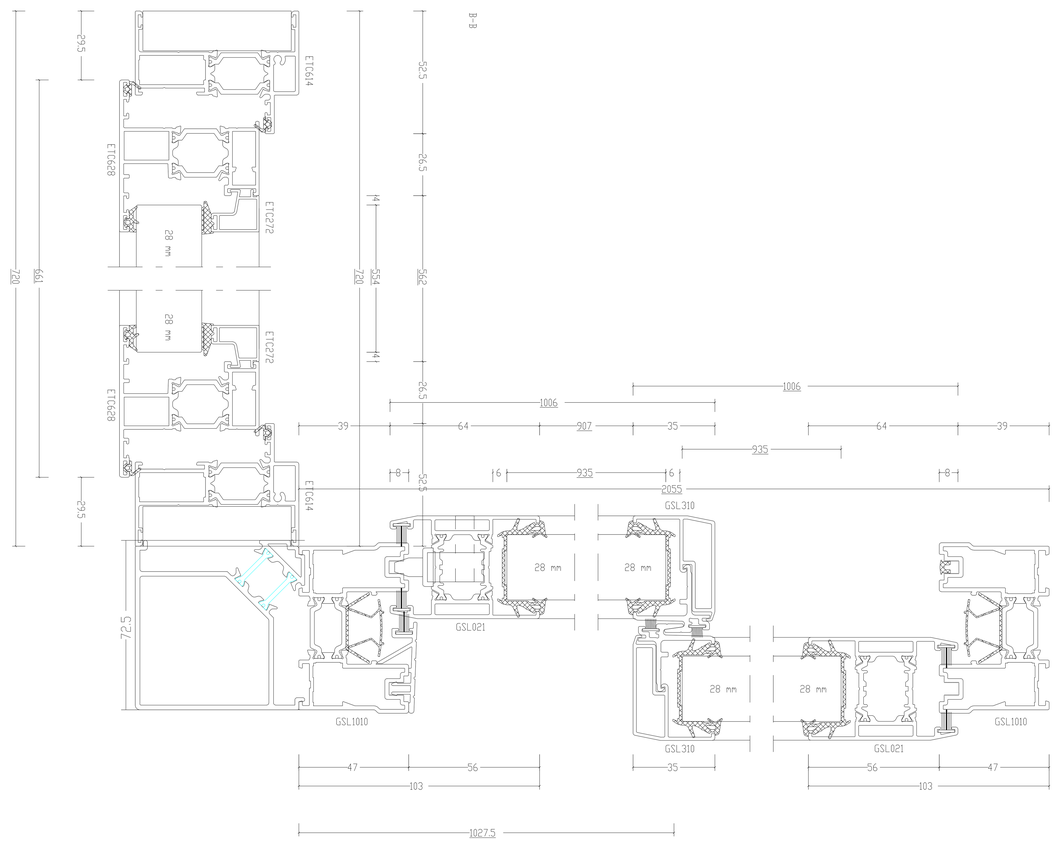

Flat 3

Pos. NE - W2, Quantity: 1
Finish: HP
Job: DWL - 23 Prince Albert Road - REV
System: SMA Alitherm 600 Square With Foam Infill
Exterior View

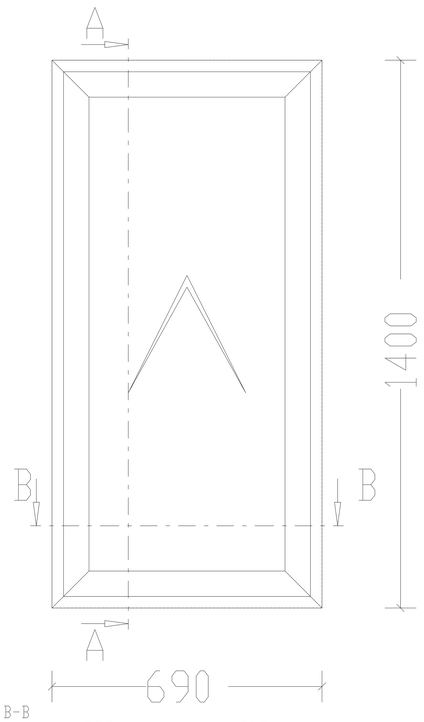

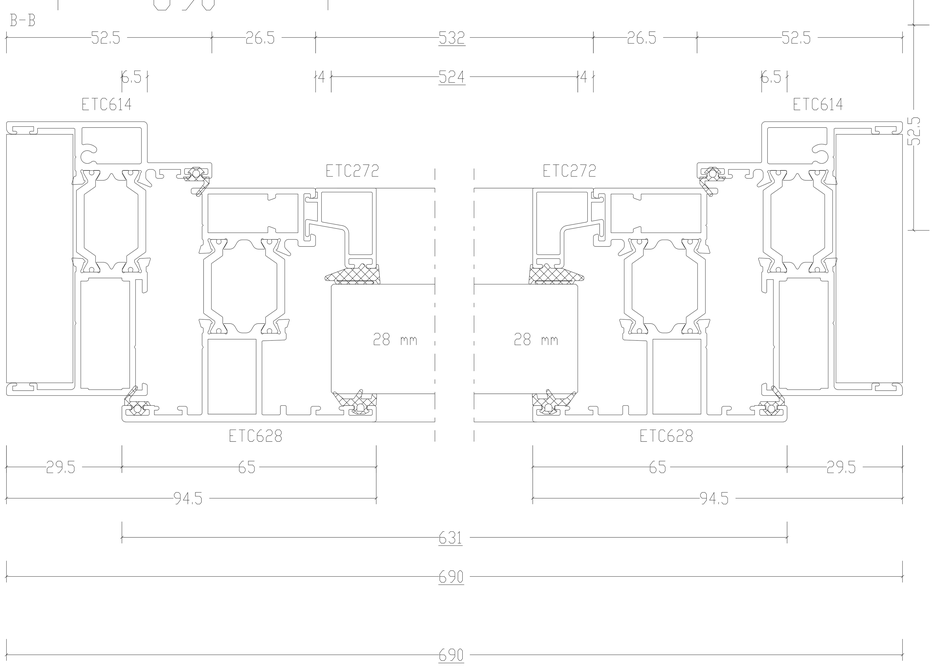

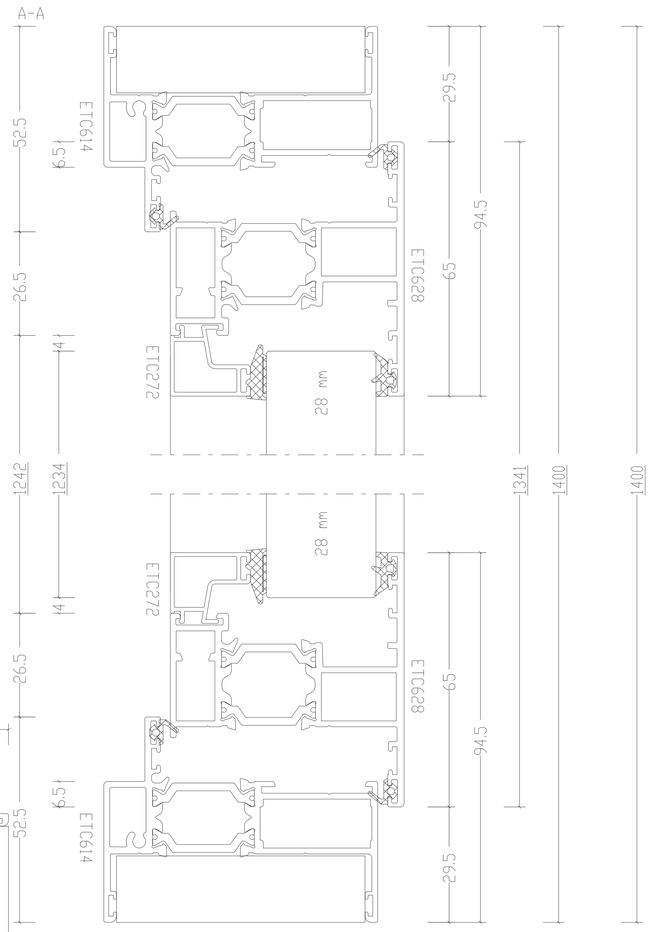

Flat 3

Pos. NE - WE - W5, Quantity: 1
Finish: HP
Job: DWL - 23 Prince Albert Road - REV
Exterior View

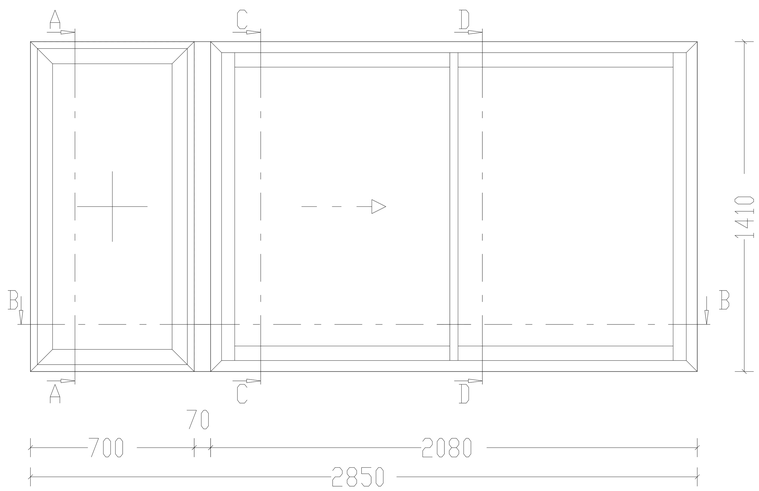

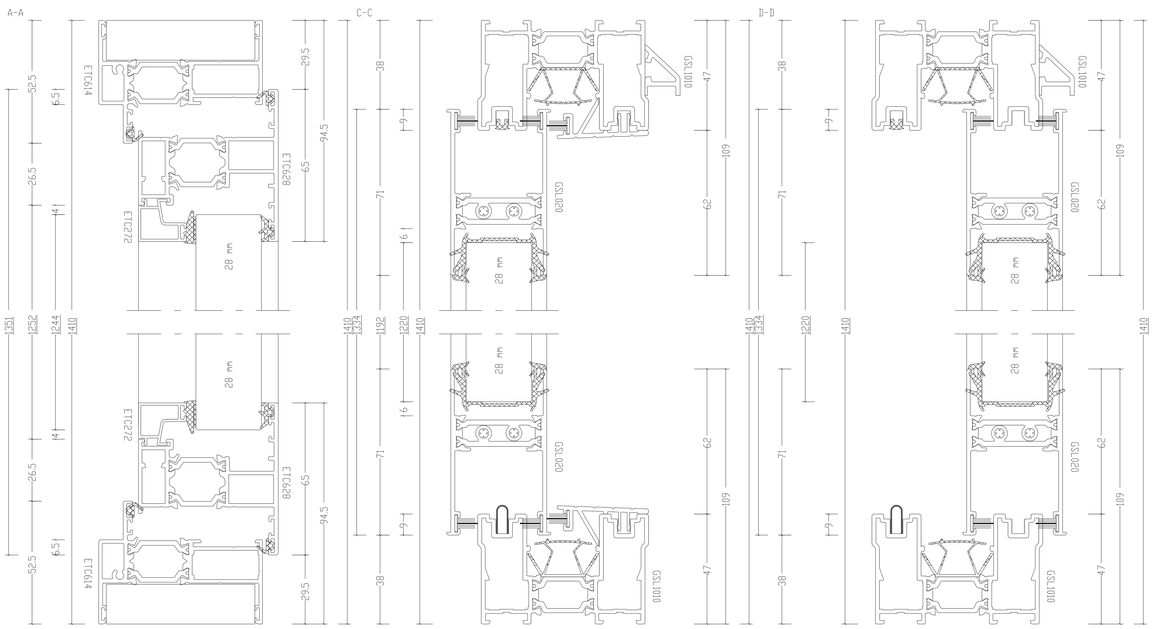

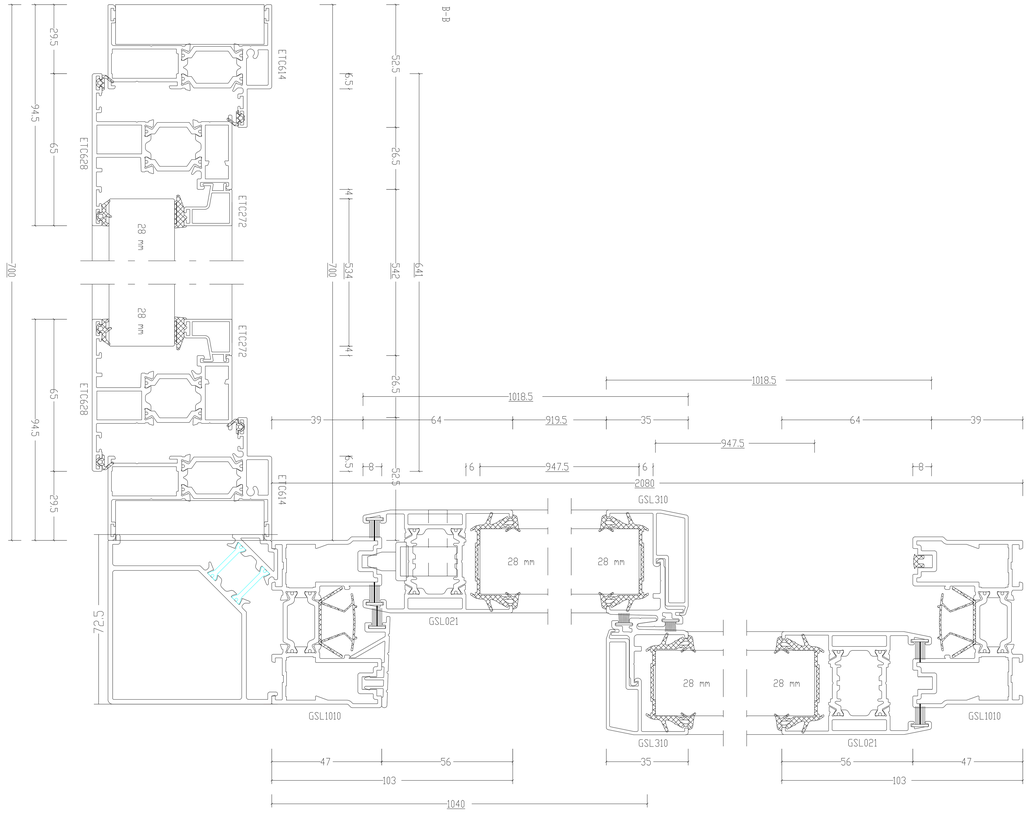

Flat 3

Pos SE - EE - W1, Quantity 1
Finish HP
Job IVL - 23 Prince Albert Road - REV
Exterior View

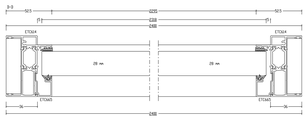

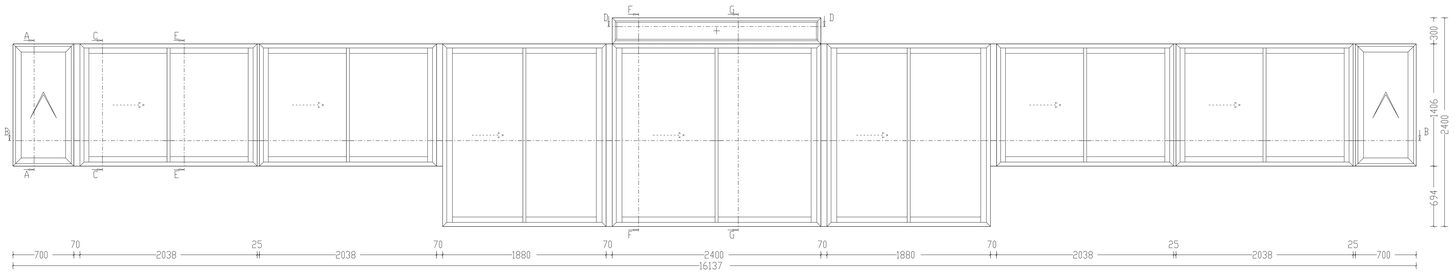

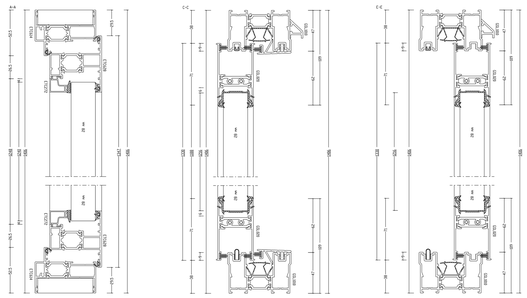

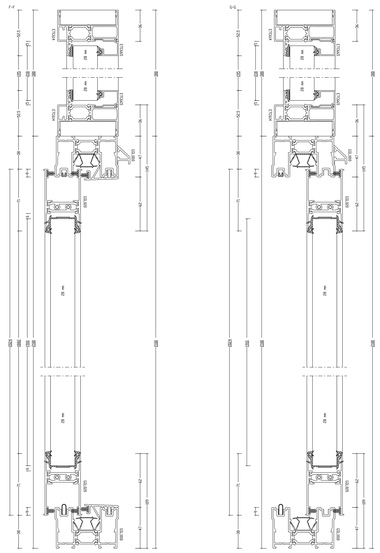

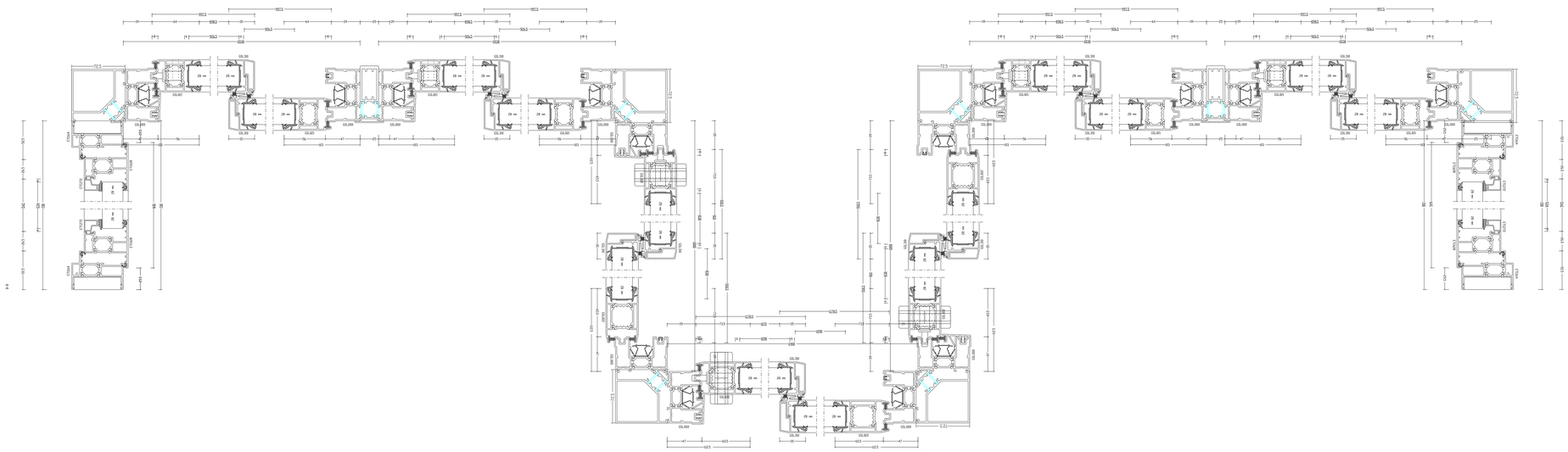

Flat 3

Pos. SS - W1, Quantity: 1
Finish: HP
Job: DWL - 23 Prince Albert Road - REV
System: SMA Alitherm 600 Square With Foam Infill
Exterior View

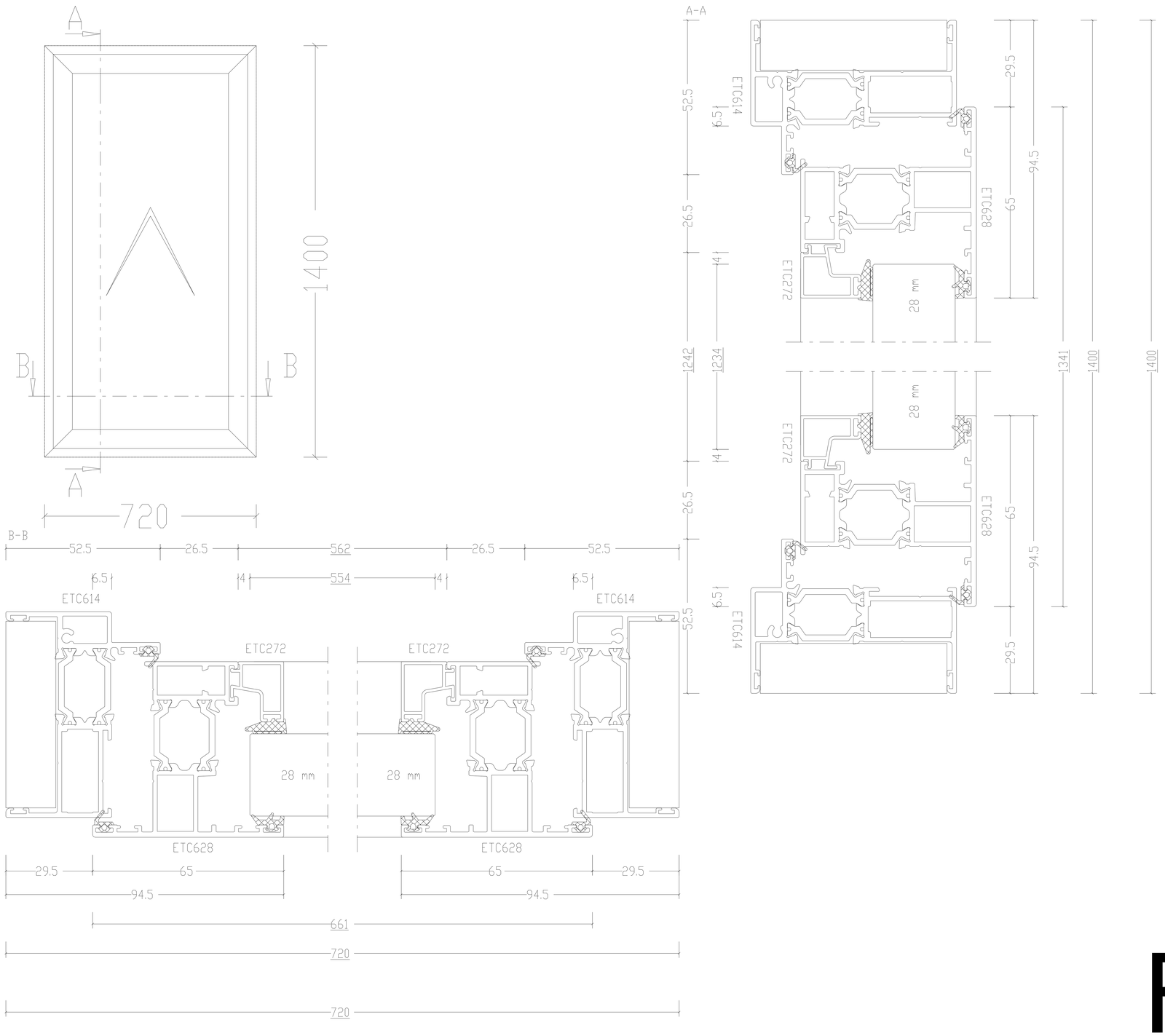

Flat 3

Pos. WE - W1, Quantity: 1
Finish: HP
Job: DWL - 23 Prince Albert Road - REV
System: SMA Slide 2000
Exterior View

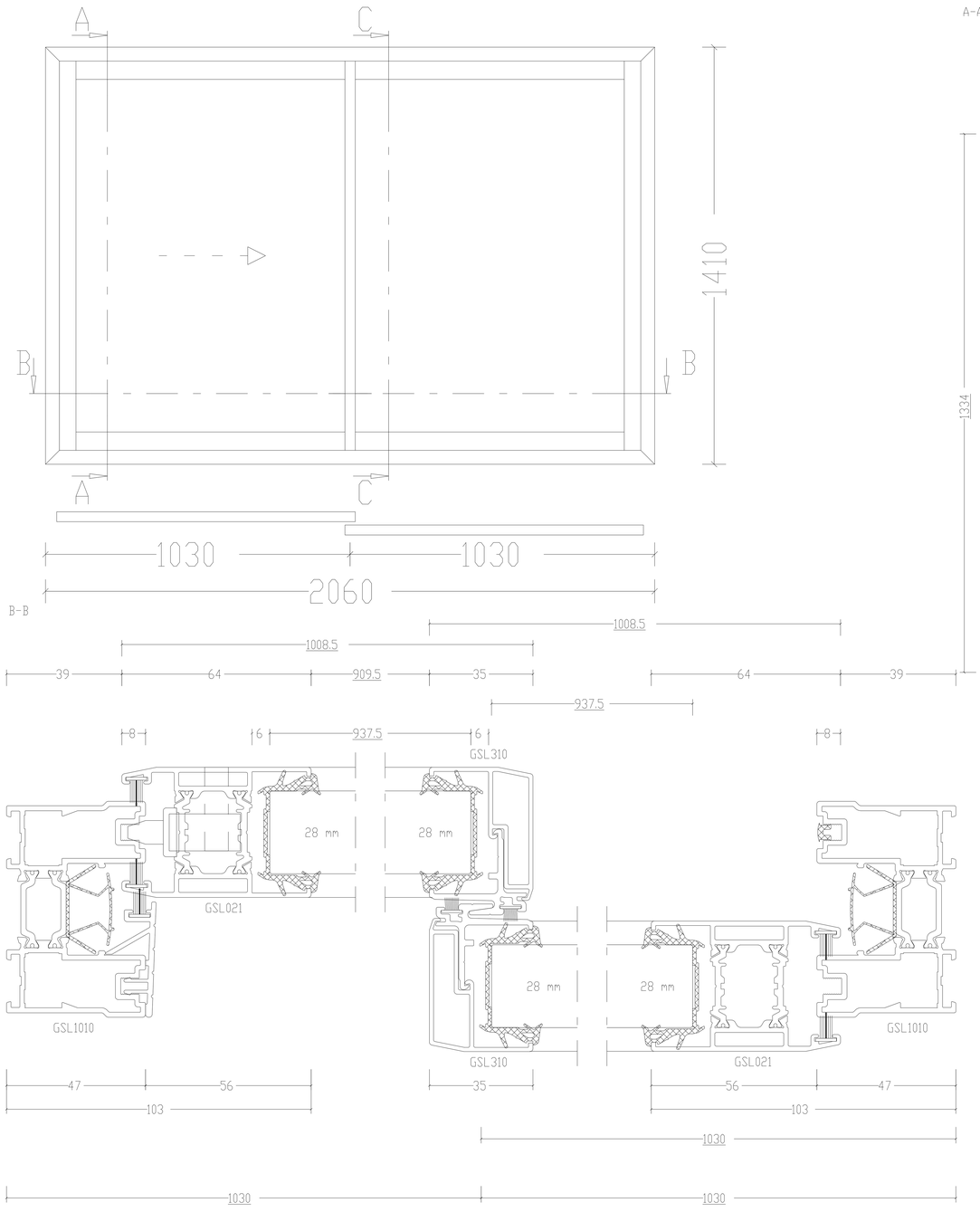

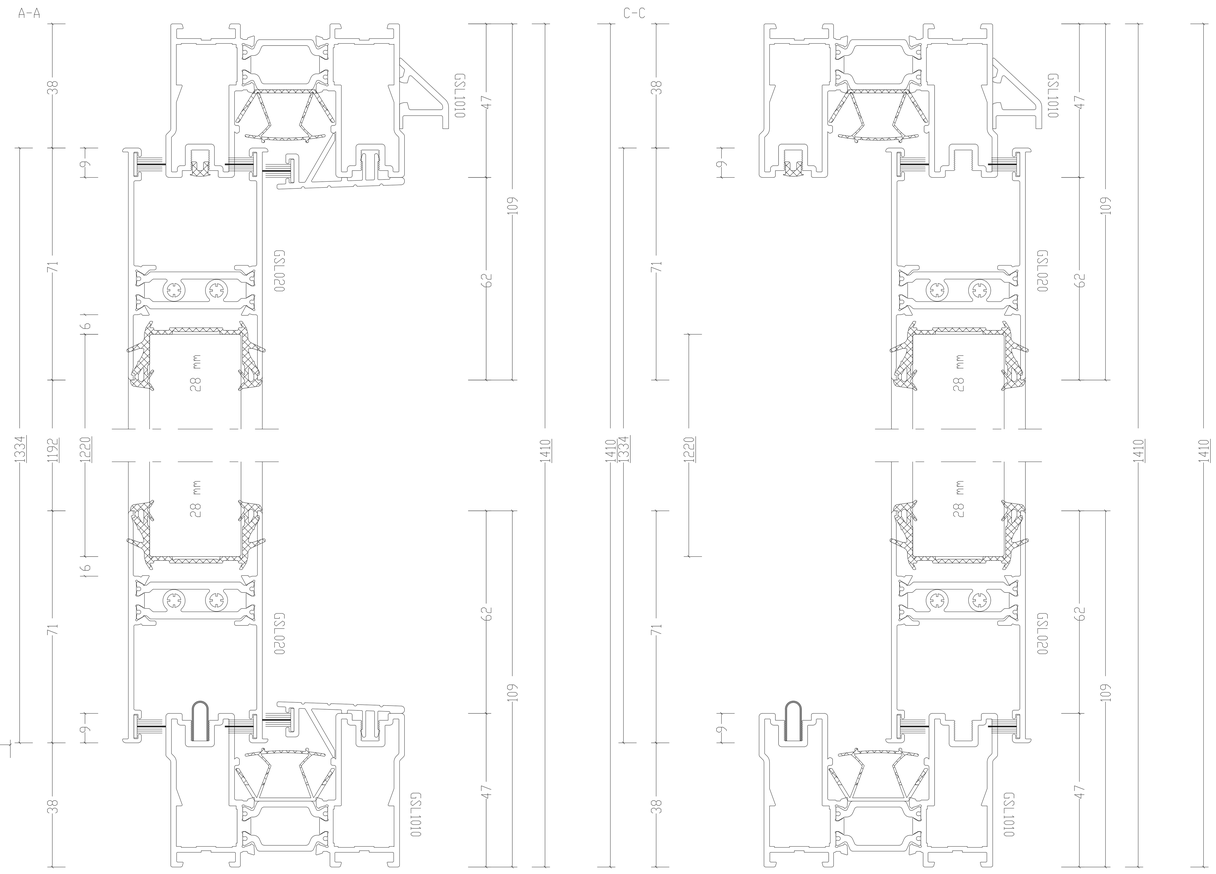

Flat 3